For Reference

COSEL

TEST DATA OF UMA30F-36

Regulated DC Power Supply
September 4, 2023

Approved by : Takashi Kajii
Design Manager

Prepared by : Akihisa Mukai
Design Engineer

COSEL CO.,LTD.

COSEL

CONTENTS

1.Input Current (by Load Current) · 1
2.Efficiency (by Load Current) · 2
3.Power Factor (by Load Current) · 3
4.Inrush Current · 4
5.Leakage Current · 5
6.Line Regulation · 6
7.Load Regulation · 7
8.Ripple-Noise · 7
9.Dynamic Load Response · 8
10.Rise and Fall Time · 9
11.Hold-Up Time · 10
12.Instantaneous Interruption Compensation · · · · · · · · · · · · · · · · · 11
13.Overcurrent Protection · 12
14.Ambient Temperature Drift · 13
15.Minimum Input Voltage for Regulated Output Voltage · · · · · · · · · · 13
16.Overvoltage Protection · 13
17.Figure of Testing Circuitry · 14
(Final Page 15)

COSEL

Model	UMA30F-36
Item	Input Current (by Load Current)
Object	+36V0.85A

Temperature 25°C
Testing Circuitry Figure A

1.Graph

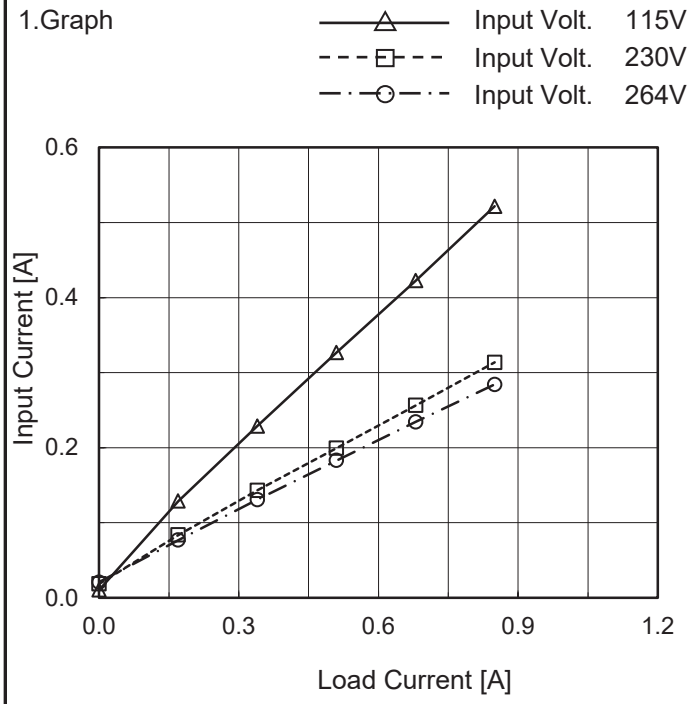

2.Values

Load Current [A]	Input Current [A]		
	Input Volt. 115[V]	Input Volt. 230[V]	Input Volt. 264[V]
0.00	0.010	0.018	0.021
0.17	0.129	0.084	0.077
0.34	0.229	0.143	0.131
0.51	0.327	0.199	0.183
0.68	0.423	0.256	0.234
0.85	0.522	0.314	0.284
--	-	-	-
--	-	-	-
--	-	-	-
--	-	-	-
--	-	-	-

BC-11935

COSEL

Model	UMA30F-36
Item	Efficiency (by Load Current)
Object	+36V0.85A

Temperature 25°C
Testing Circuitry Figure A

1.Graph

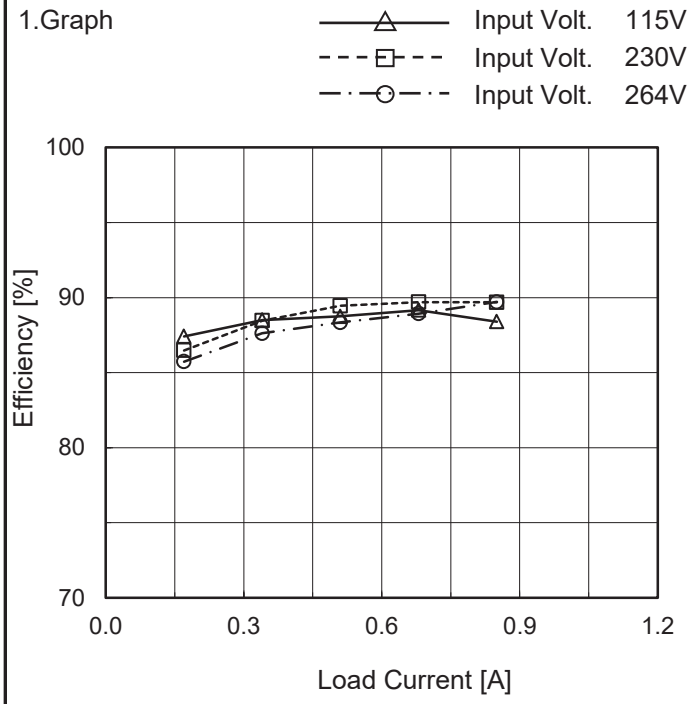

2.Values

Load Current [A]	Efficiency [%]		
	Input Volt. 115[V]	Input Volt. 230[V]	Input Volt. 264[V]
0.00	-	-	-
0.17	87.4	86.5	85.7
0.34	88.5	88.5	87.6
0.51	88.7	89.5	88.3
0.68	89.2	89.7	88.9
0.85	88.4	89.7	89.7
--	-	-	-
--	-	-	-
--	-	-	-
--	-	-	-
--	-	-	-

COSEL

Model	UMA30F-36
Item	Power Factor (by Load Current)
Object	+36V0.85A

Temperature 25°C
Testing Circuitry Figure A

1.Graph

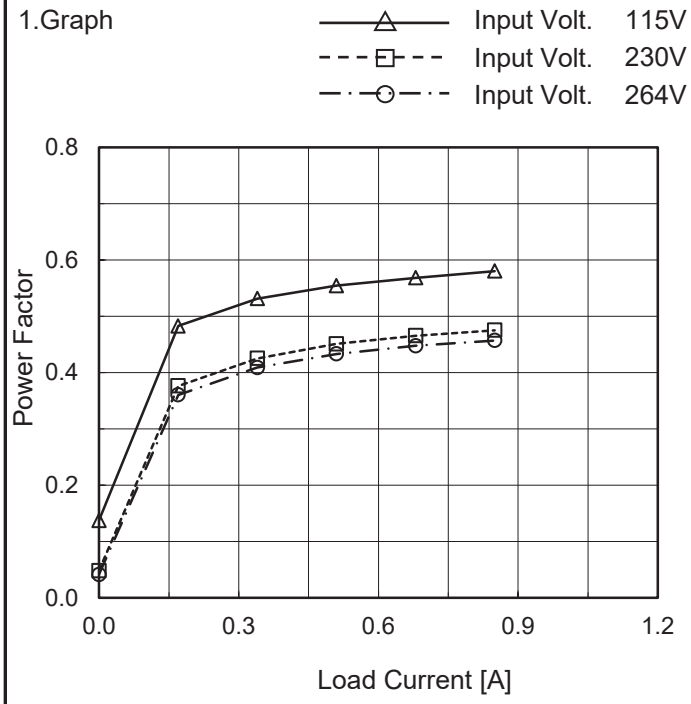

2.Values

Load Current [A]	Power Factor		
	Input Volt. 115[V]	Input Volt. 230[V]	Input Volt. 264[V]
0.00	0.137	0.048	0.041
0.17	0.483	0.376	0.361
0.34	0.532	0.425	0.409
0.51	0.555	0.451	0.433
0.68	0.568	0.466	0.448
0.85	0.580	0.475	0.457
--	-	-	-
--	-	-	-
--	-	-	-
--	-	-	-
--	-	-	-

BC-11935

COSEL

Model	UMA30F-36	
Item	Inrush Current	Temperature 25°C Testing Circuitry Figure A
Object	+36V0.85A	

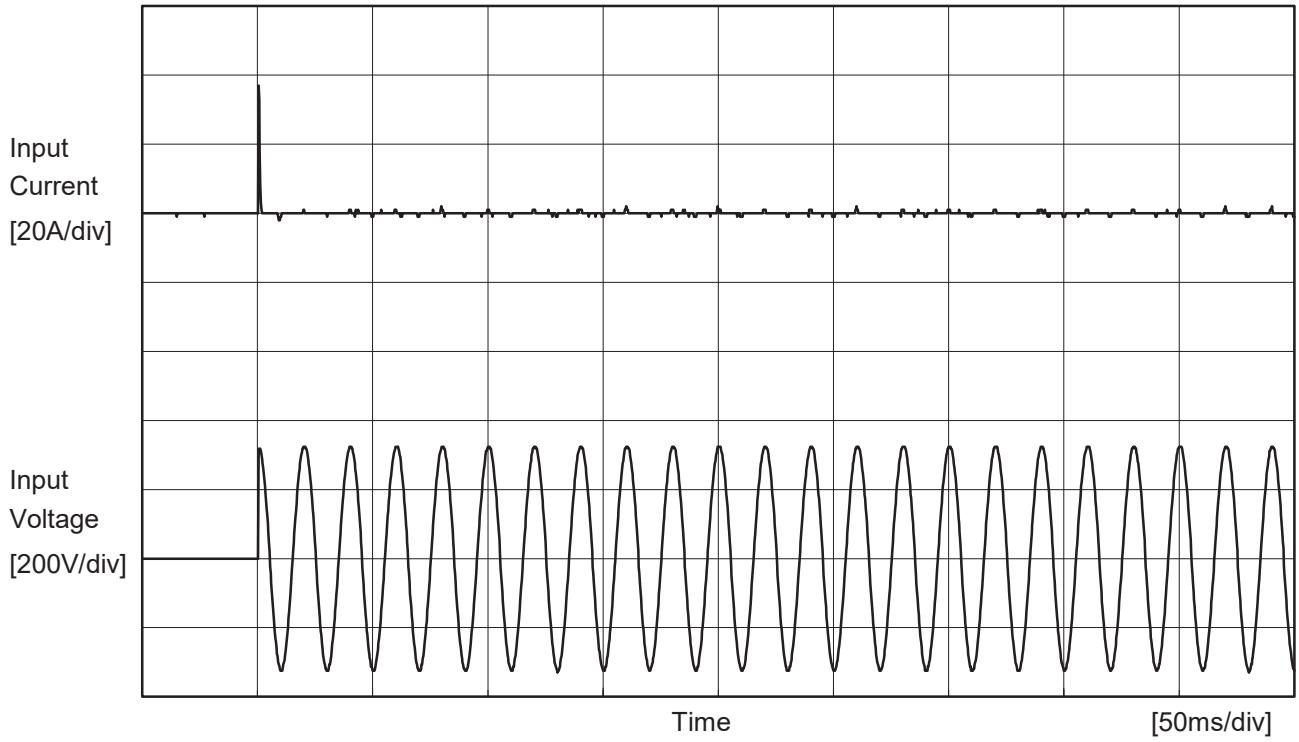

Input Voltage	230 V
Frequency	50 Hz
Load	100 %
Primary inrush current	36.9 A
Secondary inrush current	1.9 A

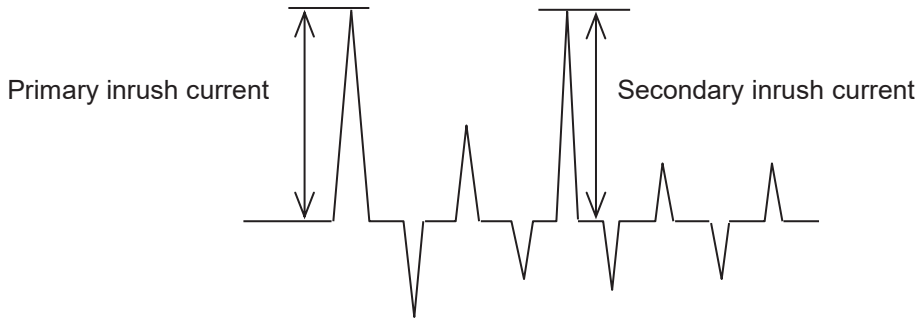

COSEL

Model	UMA30F-36
Item	Leakage Current
Object	+36V0.85A

Temperature 25°C
Testing Circuitry Figure C

1.Results

[mA]

Standards	Testing Circuitry	Measuring Method	Input Volt.			Note
			115 [V]	230 [V]	264 [V]	
IEC60601-1	Figure C-1	Both phases	0.05	0.11	0.12	Operation
		One of phases	0.10	0.21	0.24	Stand by
IEC62368-1	Figure C-2	Both phases	0.05	0.11	0.13	Operation
		One of phases	0.10	0.21	0.25	Stand by
	Figure C-3	Both phases	0.05	0.11	0.12	Operation
		One of phases	0.10	0.21	0.25	Stand by

The value for "One of phases" is the reference value only.

2.Condition

Leakage current value is concluded after measuring both phases of AC input and by choosing the larger one.

COSEL

Model	UMA30F-36
Item	Line Regulation
Object	+36V0.85A

Temperature 25°C
Testing Circuitry Figure A

1.Graph

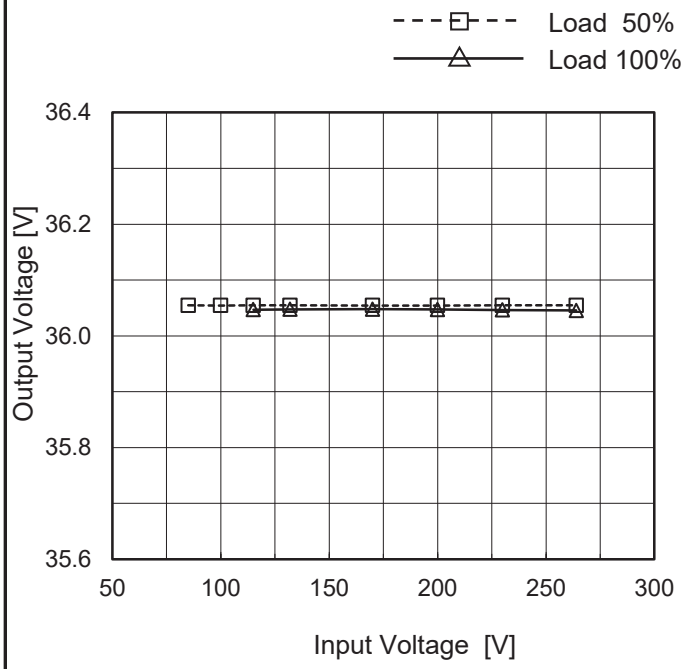

2.Values

Input Voltage [V]	Output Voltage [V]	
	Load 50%	Load 100%
85	36.055	-
100	36.054	-
115	36.055	36.047
132	36.055	36.048
170	36.054	36.048
200	36.054	36.047
230	36.055	36.046
264	36.055	36.046
--	-	-

BC-11935

COSEL

Model	UMA30F-36
Item	Load Regulation
Object	+36V0.85A

Temperature 25°C
Testing Circuitry Figure A

1.Graph

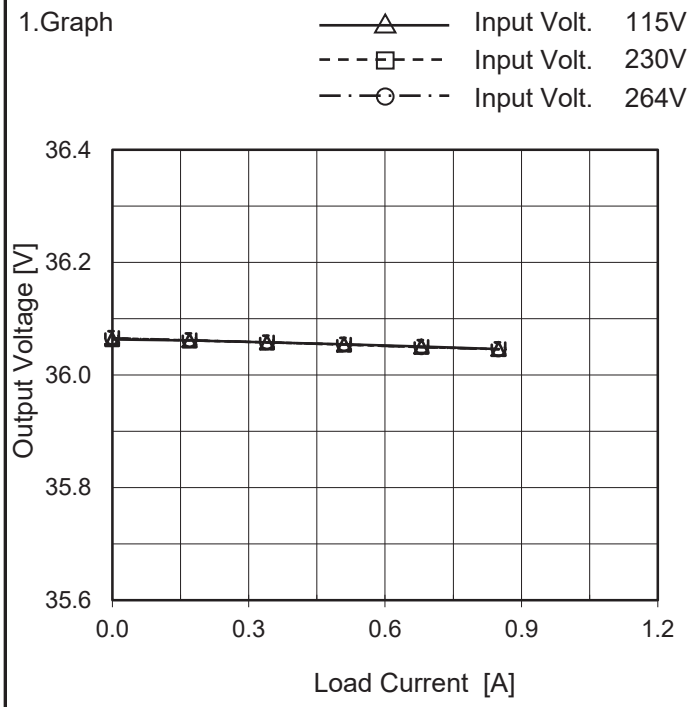

2.Values

Load Current [A]	Output Voltage [V] Input Volt. 115[V]	Input Volt. 230[V]	Input Volt. 264[V]
0.00	36.063	36.066	36.066
0.17	36.061	36.062	36.062
0.34	36.058	36.058	36.058
0.51	36.054	36.054	36.054
0.68	36.051	36.050	36.049
0.85	36.046	36.046	36.045
--	--	--	--
--	--	--	--
--	--	--	--
--	--	--	--
--	--	--	--

Item	Ripple-Noise
Object	+36V0.85A

Temperature 25°C
Testing Circuitry Figure B

1.Graph

Input Voltage 230V
Load 100%

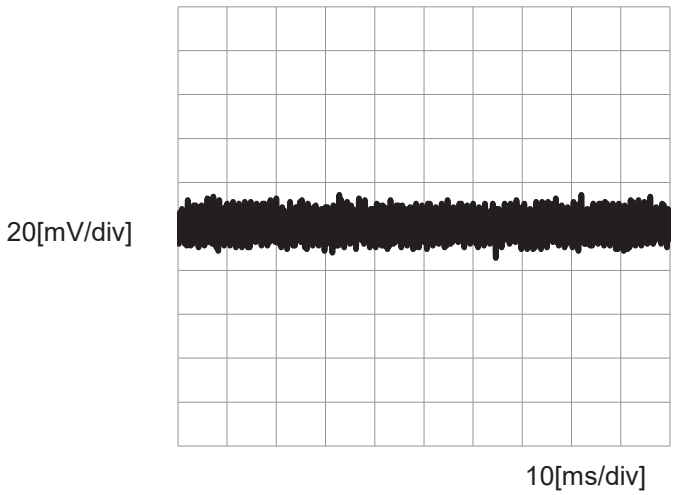

BC-11935

COSEL

Model	UMA30F-36	
Item	Dynamic Load Response	Temperature 25°C Testing Circuitry Figure A
Object	+36V0.85A	

Input Volt. 230 V
Cycle 1000 ms

Min.Load (0A)←→
Load 100% (0.85A)

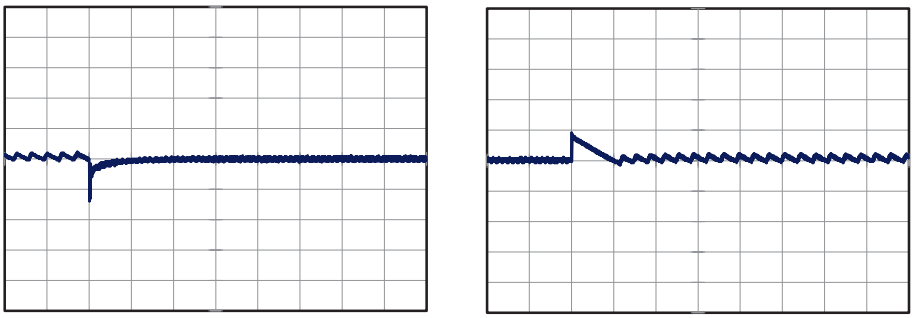

200 mV/div

10 ms/div 10 ms/div

Load 50% (0.425A)←→
Load 100% (0.85A)

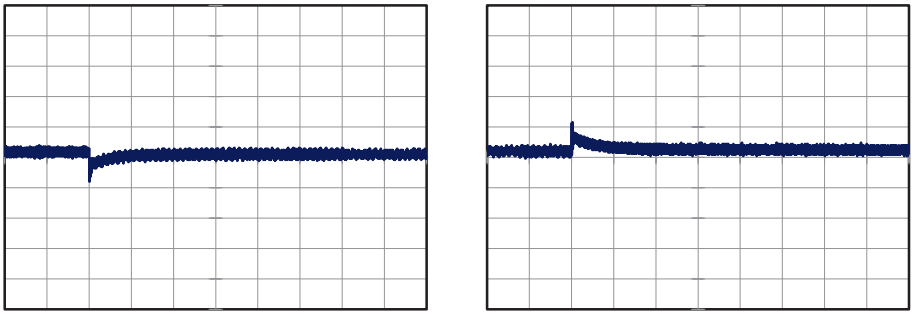

100 mV/div

10 ms/div 10 ms/div

COSEL

Model	UMA30F-36
Item	Rise and Fall Time
Object	+36V0.85A

Temperature 25°C
Testing Circuitry Figure A

1.Graph

Input Volt. 230 V

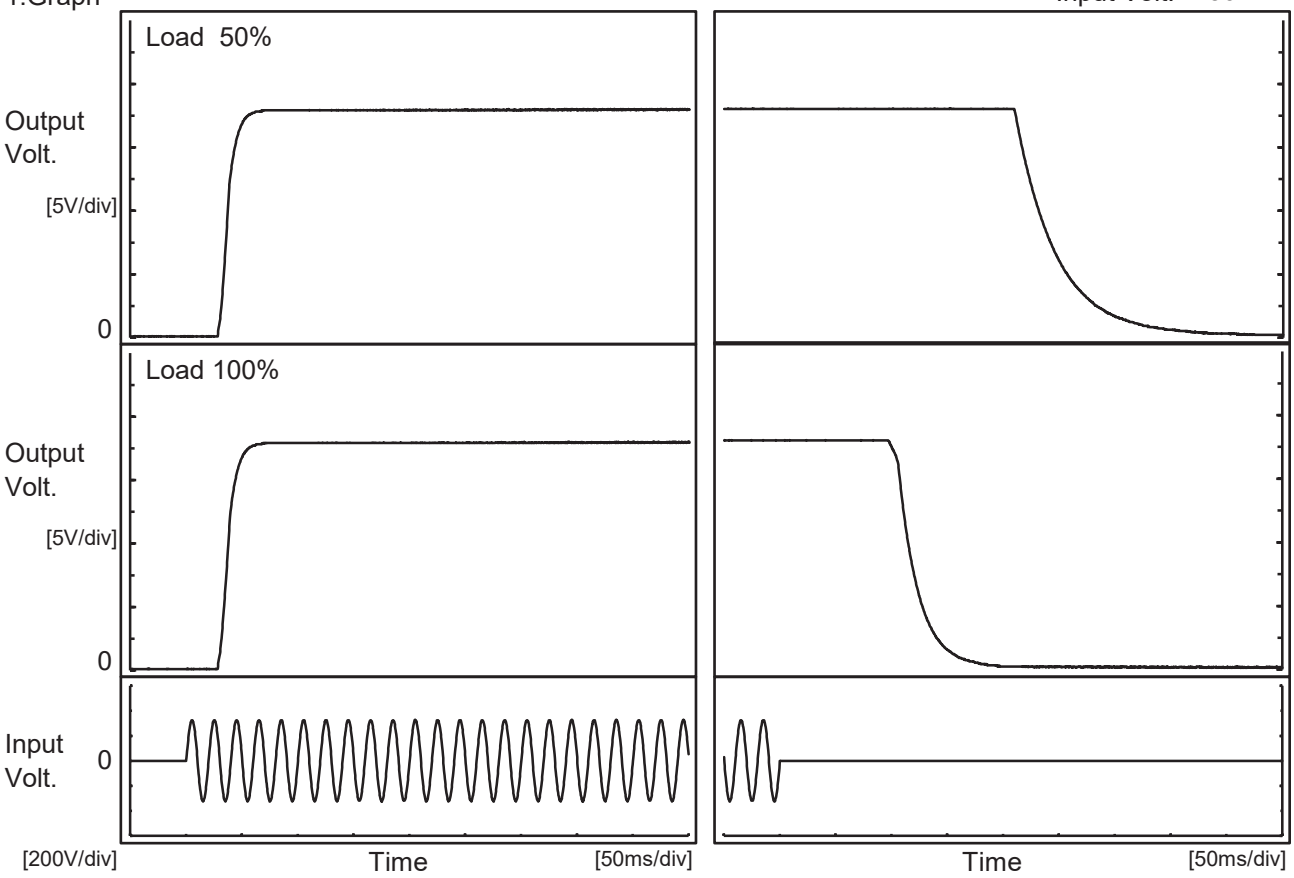

2.Values

[ms]

Load \ Time	Td	Tr	Ts	Th	Tf
50 %	31.0	16.5	47.5	213.5	81.5
100 %	31.0	17.0	48.0	105.8	40.3

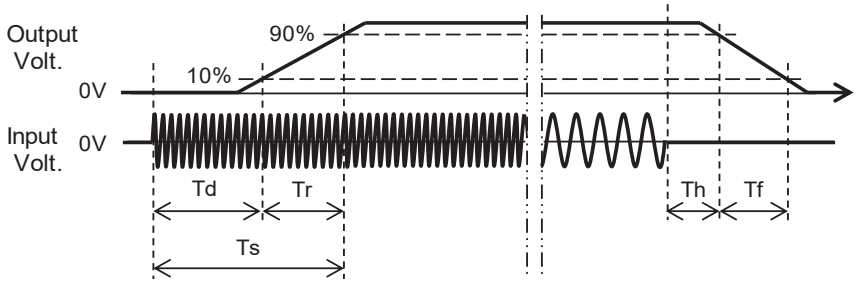

BC-11935

COSEL

Model	UMA30F-36
Item	Hold-Up Time
Object	+36V0.85A

Temperature 25°C
Testing Circuitry Figure A

1.Graph

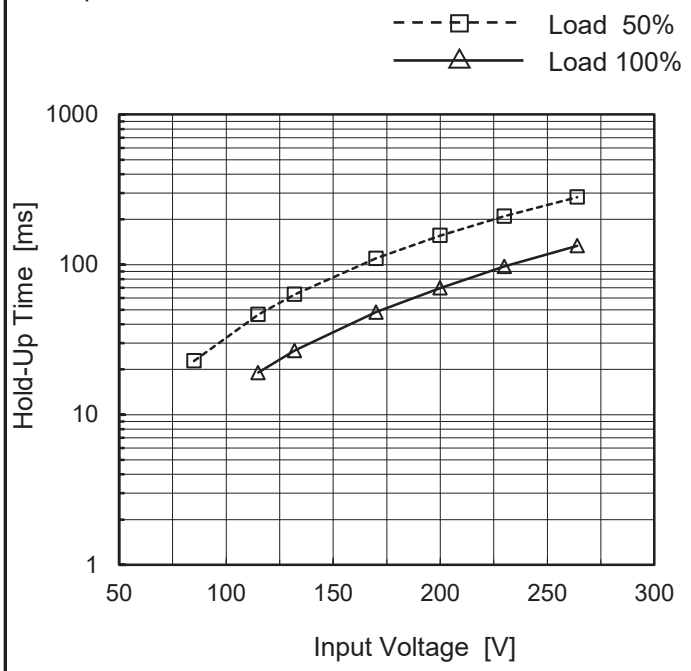

This duration covers from Shut-off of input voltage to the moment when output voltage descends to the rated range of voltage accuracy.

2.Values

Input Voltage [V]	Hold-Up Time [ms]	
	Load 50%	Load 100%
85	23	-
100	34	-
115	47	19
132	63	27
170	110	48
200	156	70
230	210	97
264	282	133
--	-	-

BC-11935

COSEL

Model	UMA30F-36
Item	Instantaneous Interruption Compensation
Object	+36V0.85A

Temperature 25°C
Testing Circuitry Figure A

1.Graph

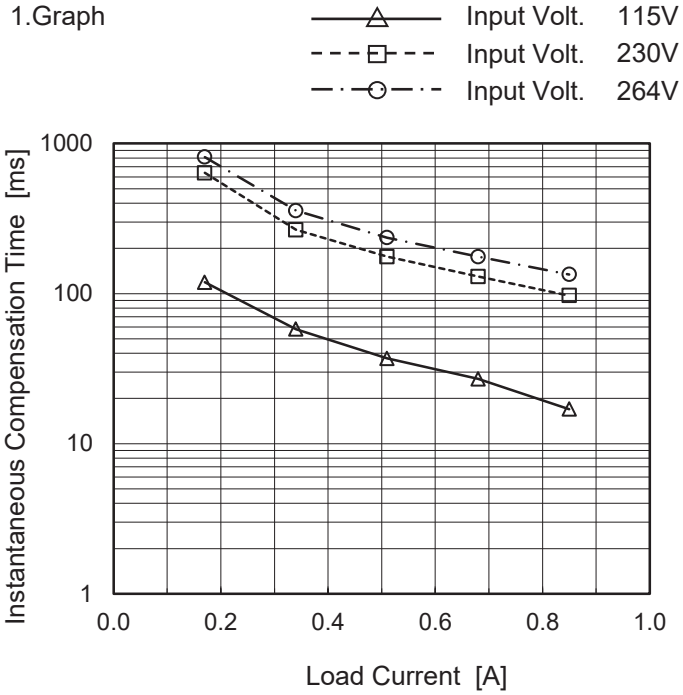

2.Values

Load Current [A]	Time [ms]		
	Input Volt. 115[V]	Input Volt. 230[V]	Input Volt. 264[V]
0.00	-	-	-
0.17	119	637	813
0.34	58	266	357
0.51	37	176	236
0.68	27	130	176
0.85	17	97	134
--	-	-	-
--	-	-	-
--	-	-	-
--	-	-	-
--	-	-	-

BC-11935

COSEL

Model	UMA30F-36
Item	Overcurrent Protection
Object	+36V0.85A

Temperature 25°C
Testing Circuitry Figure A

1.Graph

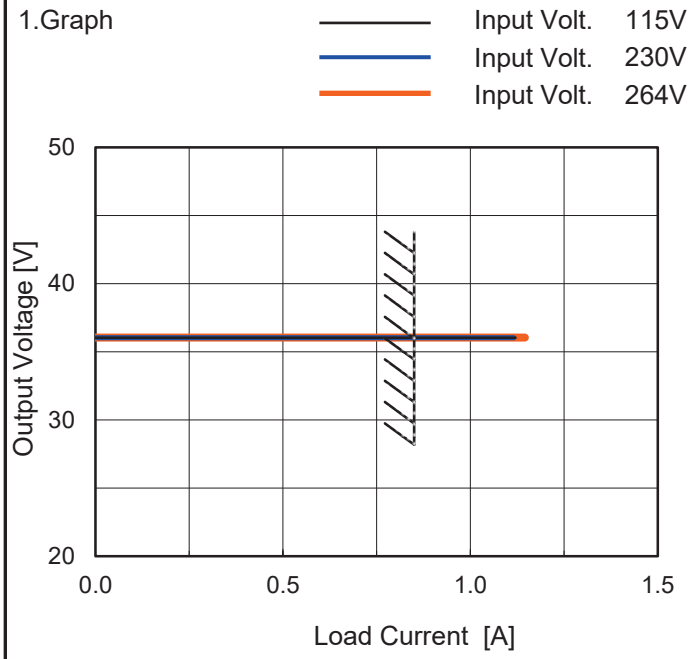

Note: Slanted line shows the range of the rated load current.

2.Values

Output Voltage [V]	Load Current [A]		
	Input Volt. 115[V]	Input Volt. 230[V]	Input Volt. 264[V]
36	1.12	1.12	1.15
--	-	-	-
--	-	-	-
--	-	-	-
--	-	-	-
--	-	-	-
--	-	-	-
--	-	-	-
--	-	-	-
--	-	-	-
--	-	-	-
--	-	-	-

BC-11935

COSEL

Model	UMA30F-36
Item	Ambient Temperature Drift
Object	+36V0.85A

Testing Circuitry Figure A

1.Values

Load 100%

Ambient Temperature[℃]	Output Voltage [V]		
	Input Volt. 115V	Input Volt. 230V	Input Volt. 264V
-20	35.854	35.856	35.856
25	36.044	36.044	36.043
50	36.107	36.107	36.106

Item	Minimum Input Voltage for Regulated Output Voltage
Object	+36V0.85A

Testing Circuitry Figure A

1.Values

Ambient Temperature[℃]	Input Voltage [V]	
	Load 50%	Load 100%
-20	37	64
25	36	65
50	35	66

Item	Overvoltage Protection
Object	+36V0.85A

Testing Circuitry Figure A

1.Values

Load 0%

Ambient Temperature[℃]	Operating Point [V]	
	Input Volt. 115V	Input Volt. 264V
-20	44.20	44.20
25	45.92	45.92
50	46.89	46.89

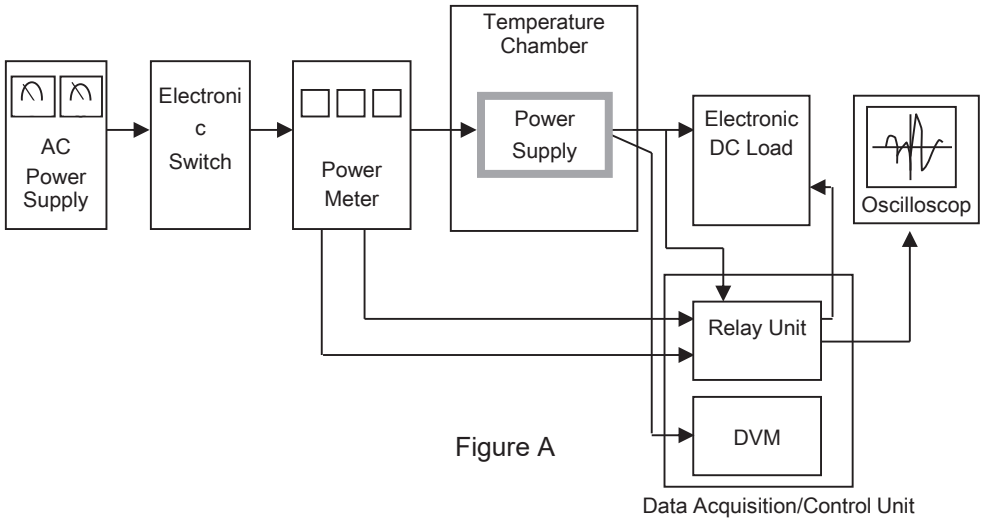

Figure A

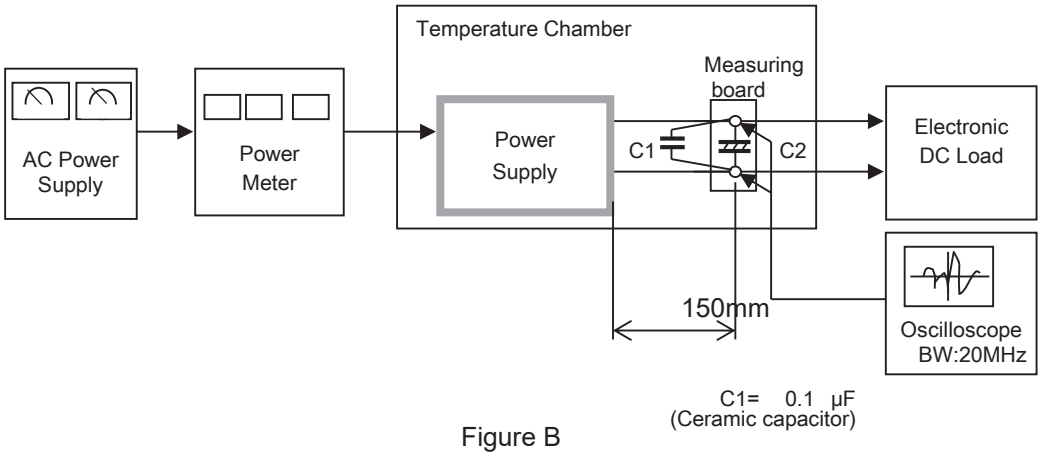

Figure B

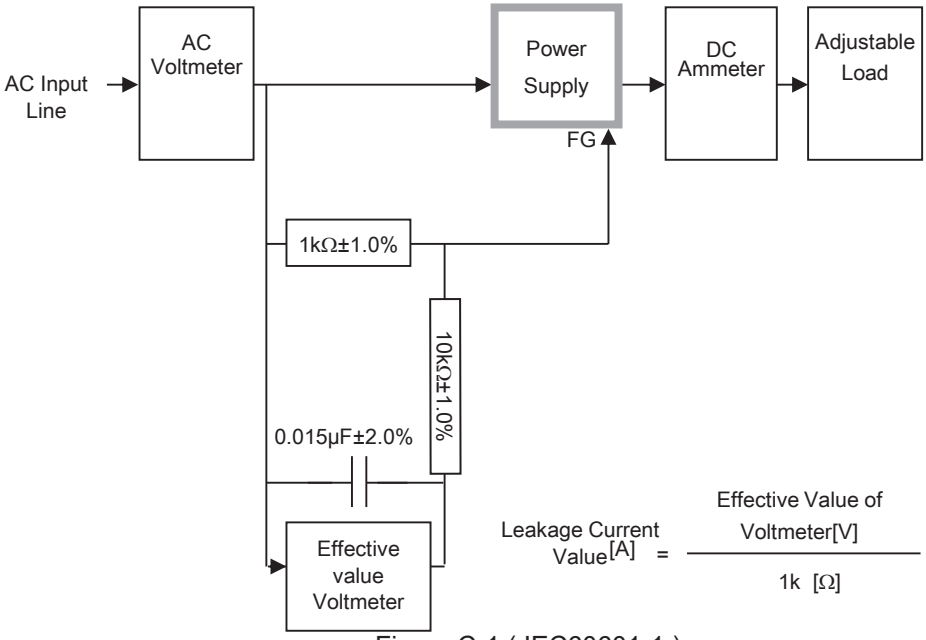

Figure C-1 (IEC60601-1)

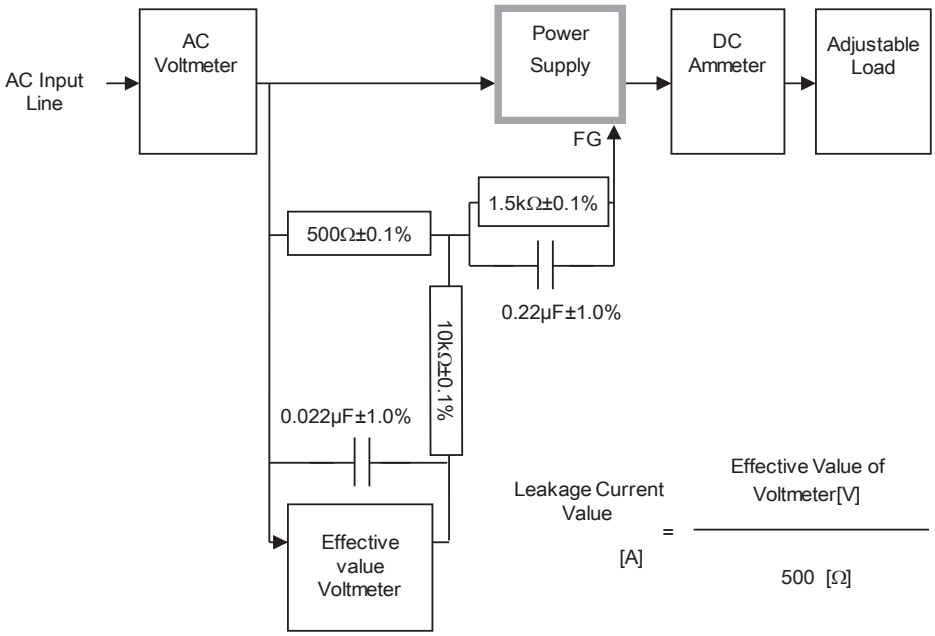

Figure C-2 (IEC62368-1 refer to IEC60990 Fig.4)

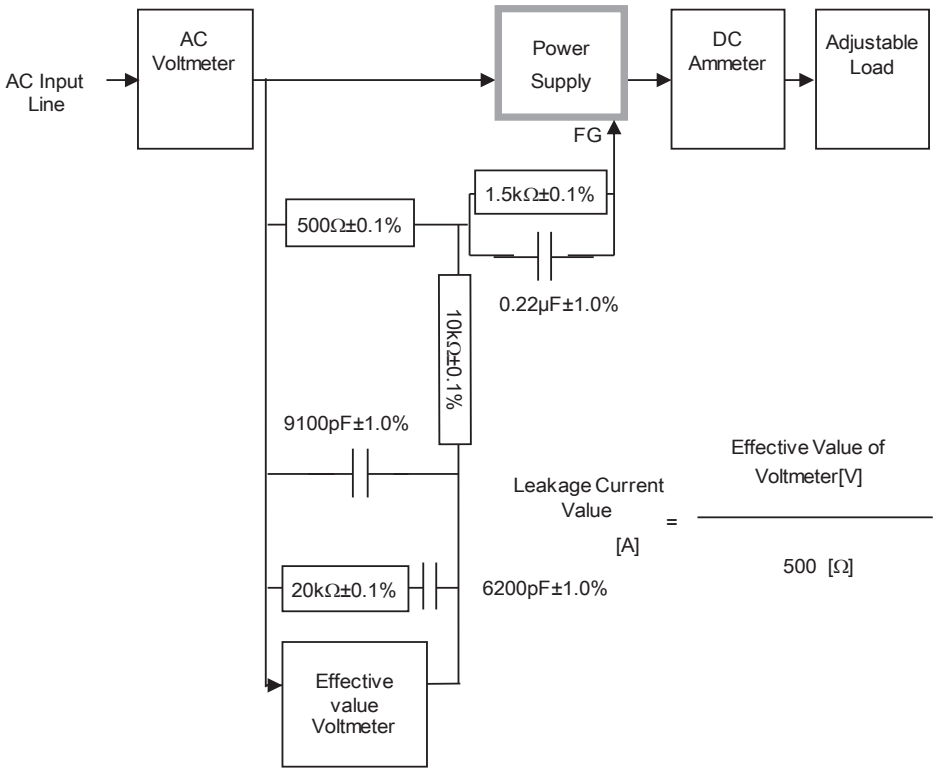

Figure C-3 (IEC62368-1 refer to IEC60990 Fig.5)