For Reference

TEST DATA OF TECS10F-15

Regulated DC Power Supply
February 28, 2025

Approved by : Tetsuro Hirata
Design Manager

Prepared by : Junichi Otsubo
Design Engineer

COSEL CO.,LTD.

COSEL

CONTENTS

1.Input Current (by Load Current) · 1
2.Efficiency (by Load Current) · 2
3.Power Factor (by Load Current) · 3
4.Inrush Current · 4
5.Leakage Current · 5
6.Line Regulation · 6
7.Load Regulation · 7
8.Ripple-Noise · 7
9.Dynamic Load Response · 8
10.Rise and Fall Time · 9
11.Hold-Up Time · 10
12.Instantaneous Interruption Compensation · · · · · · · · · · · · · · · · · 11
13.Overcurrent Protection · 12
14.Ambient Temperature Drift · 13
15.Minimum Input Voltage for Regulated Output Voltage · · · · · · · · · · 13
16.Overvoltage Protection · 13
17.Figure of Testing Circuitry · 14
(Final Page 15)

COSEL

Model	TECS10F-15
Item	Input Current (by Load Current)
Object	————————

Temperature 25°C
Testing Circuitry Figure A

1.Graph

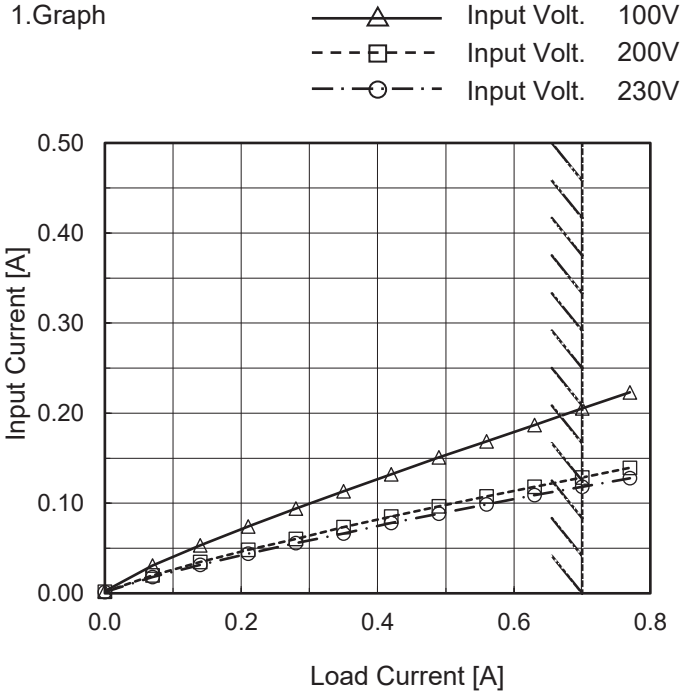

Note: Slanted line shows the range of the rated load current.

2.Values

Load Current [A]	Input Current [A]		
	Input Volt. 100[V]	Input Volt. 200[V]	Input Volt. 230[V]
0.00	0.002	0.002	0.001
0.07	0.031	0.020	0.018
0.14	0.053	0.035	0.032
0.21	0.074	0.048	0.044
0.28	0.094	0.061	0.056
0.35	0.113	0.074	0.067
0.42	0.132	0.085	0.078
0.49	0.151	0.096	0.088
0.56	0.169	0.108	0.099
0.63	0.187	0.118	0.109
0.70	0.205	0.129	0.118
0.77	0.223	0.139	0.128

BC-12084

COSEL

Model	TECS10F-15
Item	Efficiency (by Load Current)
Object	————————

Temperature 25°C
Testing Circuitry Figure A

1.Graph

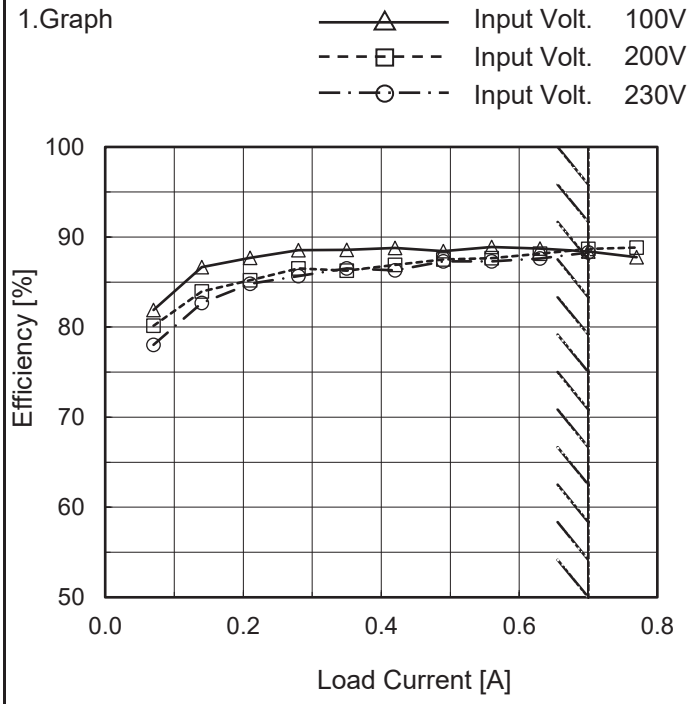

Note: Slanted line shows the range of the rated load current.

2.Values

Load Current [A]	Efficiency [%]		
	Input Volt. 100[V]	Input Volt. 200[V]	Input Volt. 230[V]
0.00	-	-	-
0.07	81.9	80.1	78.0
0.14	86.7	84.0	82.7
0.21	87.7	85.2	84.8
0.28	88.6	86.5	85.7
0.35	88.6	86.3	86.5
0.42	88.8	86.9	86.3
0.49	88.4	87.5	87.3
0.56	88.9	87.7	87.3
0.63	88.7	88.1	87.6
0.70	88.4	88.7	88.3
0.77	87.8	88.8	88.5

COSEL

Model	TECS10F-15
Item	Power Factor (by Load Current)
Object	————————

Temperature 25°C
Testing Circuitry Figure A

1.Graph

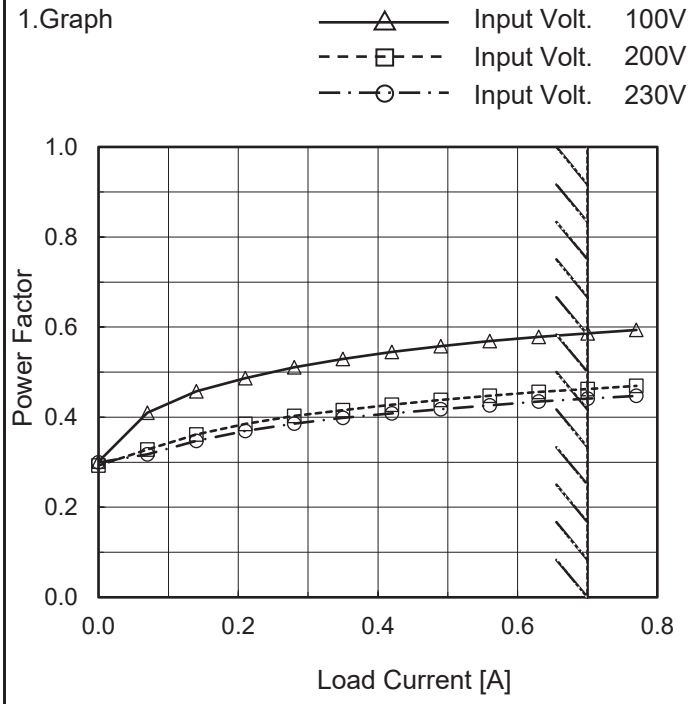

Note: Slanted line shows the range of the rated load current.

2.Values

Load Current [A]	Power Factor		
	Input Volt. 100[V]	Input Volt. 200[V]	Input Volt. 230[V]
0.00	0.301	0.293	0.299
0.07	0.410	0.328	0.317
0.14	0.457	0.361	0.348
0.21	0.486	0.385	0.369
0.28	0.511	0.403	0.385
0.35	0.529	0.416	0.399
0.42	0.545	0.428	0.408
0.49	0.558	0.438	0.417
0.56	0.569	0.448	0.427
0.63	0.578	0.456	0.434
0.70	0.586	0.463	0.441
0.77	0.594	0.469	0.447

COSEL

Model	TECS10F-15	
Item	Inrush Current	Temperature 25°C Testing Circuitry Figure A
Object	————————	

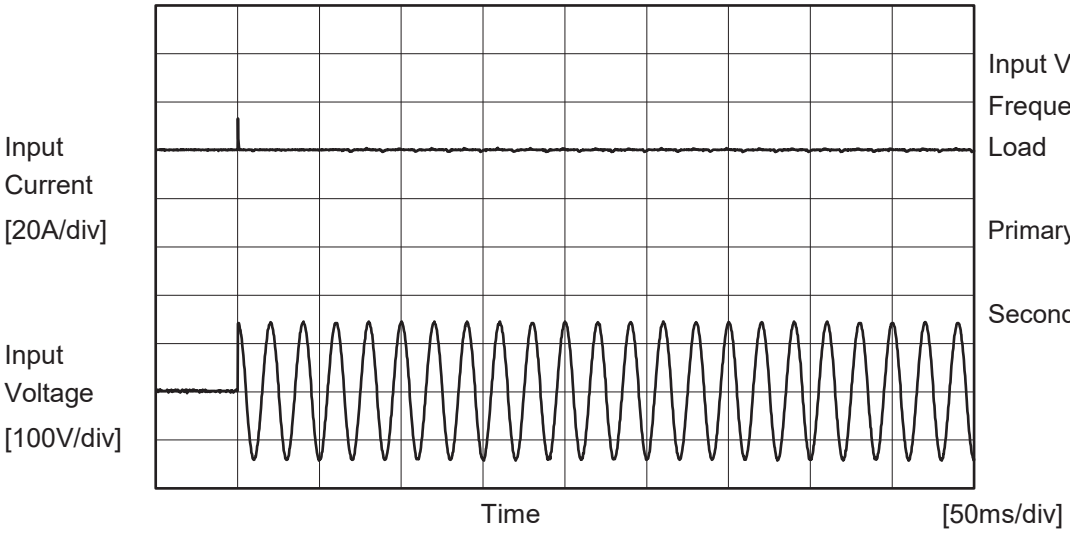

Input Voltage 100 V
Frequency 50 Hz
Load 100 %

Primary inrush current : 13.2 A
Secondary inrush current : 1.0 A

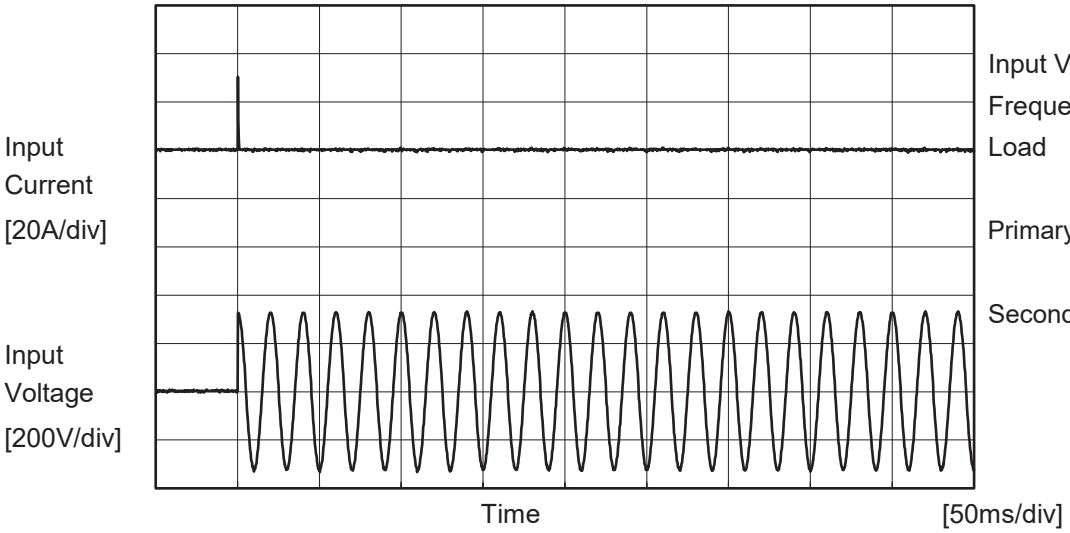

Input Voltage 230 V
Frequency 50 Hz
Load 100 %

Primary inrush current : 30.4 A
Secondary inrush current : 1.0 A

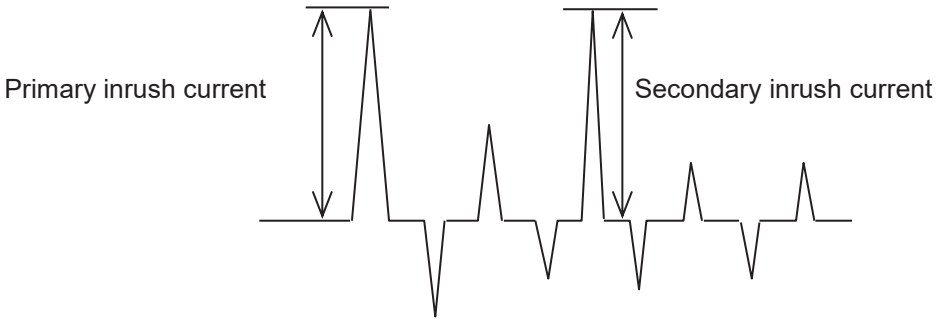

COSEL

Model	TECS10F-15	
Item	Leakage Current	Temperature 25°C Testing Circuitry Figure C
Object	――――――――――	

1.Results

[μA]

Standards	Testing Circuitry	Measuring Method	Input Volt.			Note
			100 [V]	230 [V]	264 [V]	
DEN-AN	Figure C-1	Both phases	24	47	53	Operation
		One of phases	28	69	81	Stand by
IEC62368-1	Figure C-2	Both phases	19	44	52	Operation
		One of phases	28	69	81	Stand by
	Figure C-3	Both phases	19	45	52	Operation
		One of phases	28	69	81	Stand by

The value for "One of phases" is the reference value only.

2.Condition

Leakage current value is concluded after measuring both phases of AC input and by choosing the larger one.

COSEL

Model	TECS10F-15
Item	Line Regulation
Object	+15V0.7A

Temperature 25°C
Testing Circuitry Figure A

1.Graph

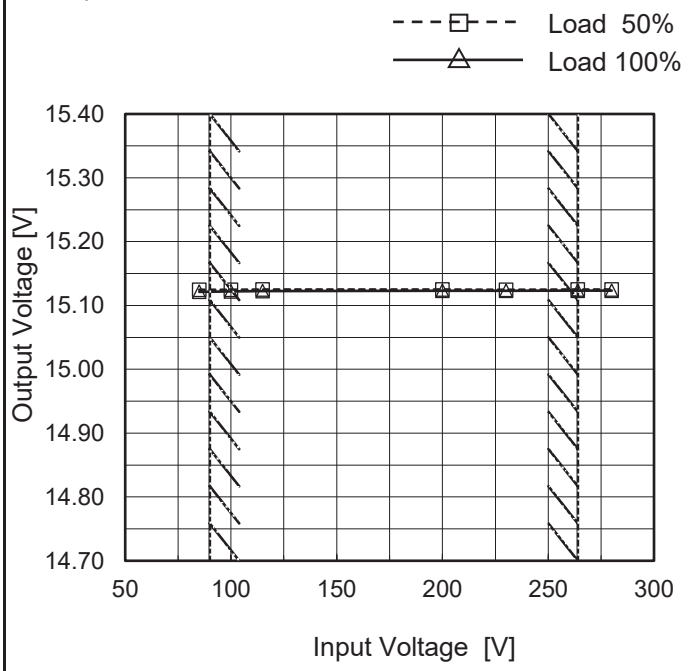

Note: Slanted line shows the range of the rated input voltage.

2.Values

Input Voltage [V]	Output Voltage [V]	
	Load 50%	Load 100%
85	15.125	15.121
100	15.125	15.122
115	15.125	15.123
200	15.125	15.123
230	15.125	15.123
264	15.125	15.123
280	15.125	15.123
--	-	-
--	-	-

BC-12084

COSEL

Model	TECS10F-15
Item	Load Regulation
Object	+15V0.7A

Temperature 25°C
Testing Circuitry Figure A

1.Graph

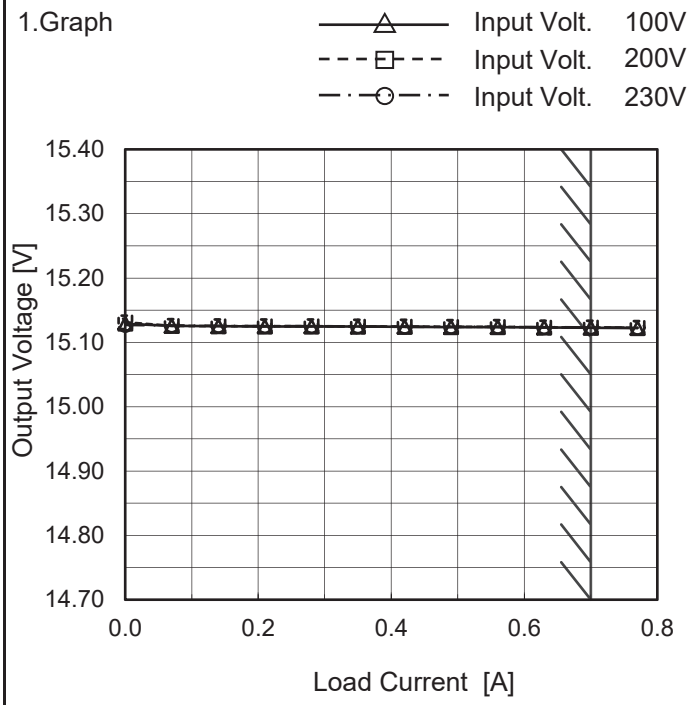

Note: Slanted line shows the range of the rated load current.

2.Values

Load Current [A]	Output Voltage [V]		
	Input Volt. 100[V]	Input Volt. 200[V]	Input Volt. 230[V]
0.00	15.129	15.131	15.127
0.07	15.126	15.126	15.126
0.14	15.125	15.125	15.126
0.21	15.125	15.125	15.125
0.28	15.125	15.125	15.125
0.35	15.125	15.125	15.125
0.42	15.124	15.125	15.124
0.49	15.124	15.124	15.124
0.56	15.124	15.124	15.124
0.63	15.123	15.123	15.124
0.70	15.123	15.123	15.123
0.77	15.122	15.123	15.123

Item	Ripple-Noise
Object	+15V0.7A

Temperature 25°C
Testing Circuitry Figure B

1.Graph

Input Voltage 230V
Load 100%

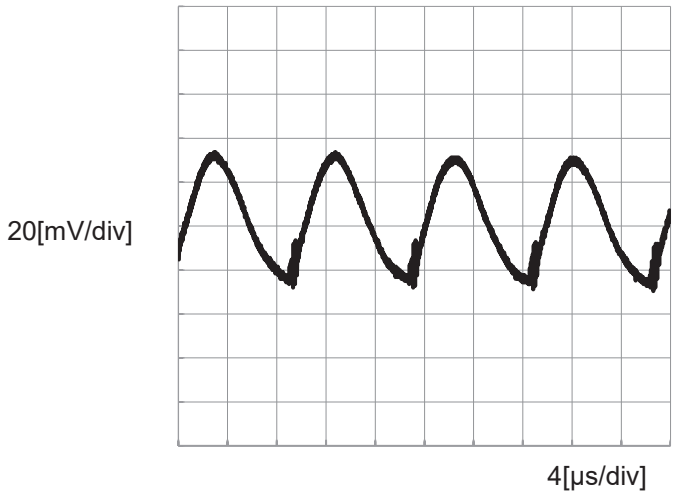

COSEL

Model	TECS10F-15	
Item	Dynamic Load Response	Temperature 25°C Testing Circuitry Figure A
Object	+15V0.7A	

Input Volt. 230 V
Cycle 1000 ms

Response. t1=t2=50µs. Typ

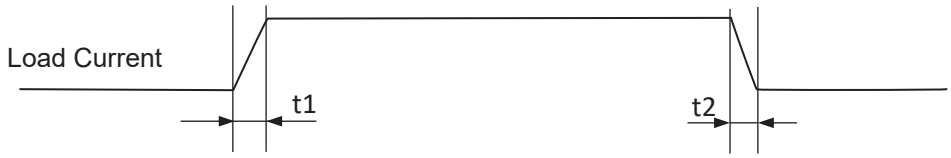

Load 0%(0A) ←→
Load 100%(0.7A)

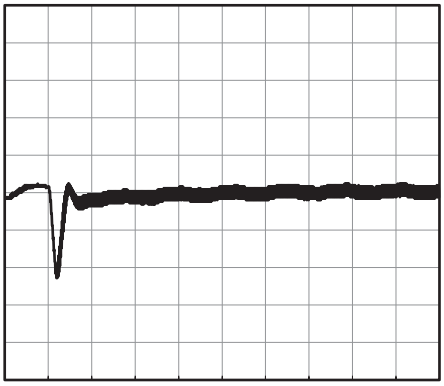

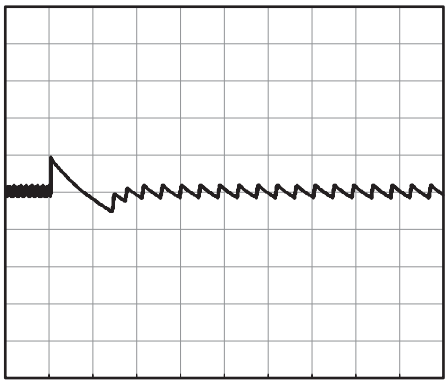

200[mV/div]

1[ms/div]

10[ms/div]

Load 50%(0.35A) ←→
Load 100%(0.7A)

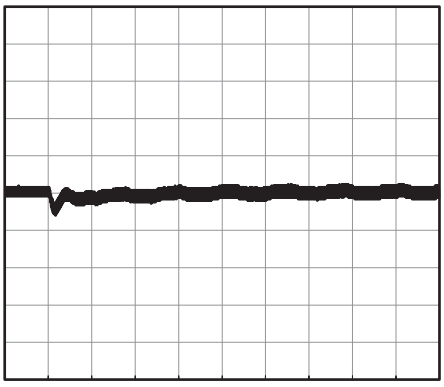

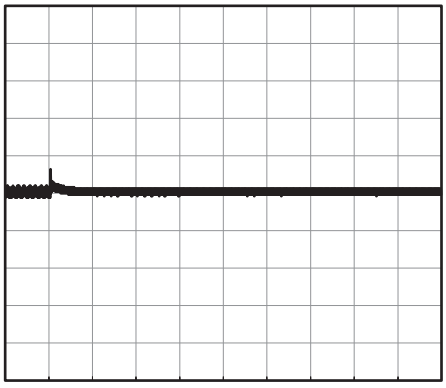

200[mV/div]

1[ms/div]

10[ms/div]

Load 0%(0A) ←→
Load 50%(0.35A)

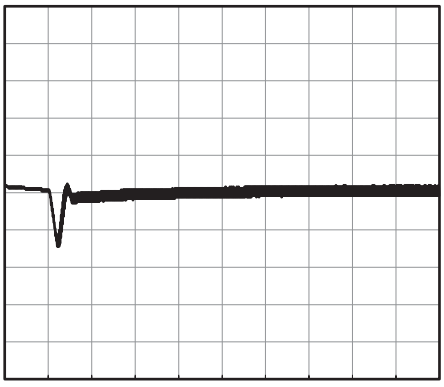

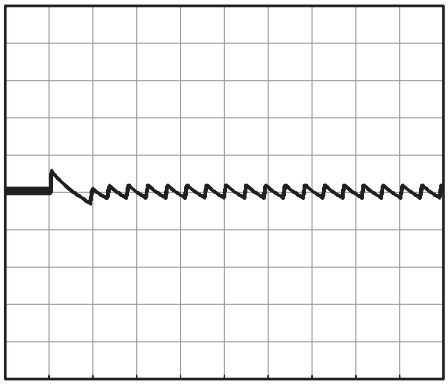

200[mV/div]

1[ms/div]

10[ms/div]

COSEL

Model	TECS10F-15	
Item	Rise and Fall Time	Temperature 25°C Testing Circuitry Figure A
Object	+15V0.7A	

1.Graph

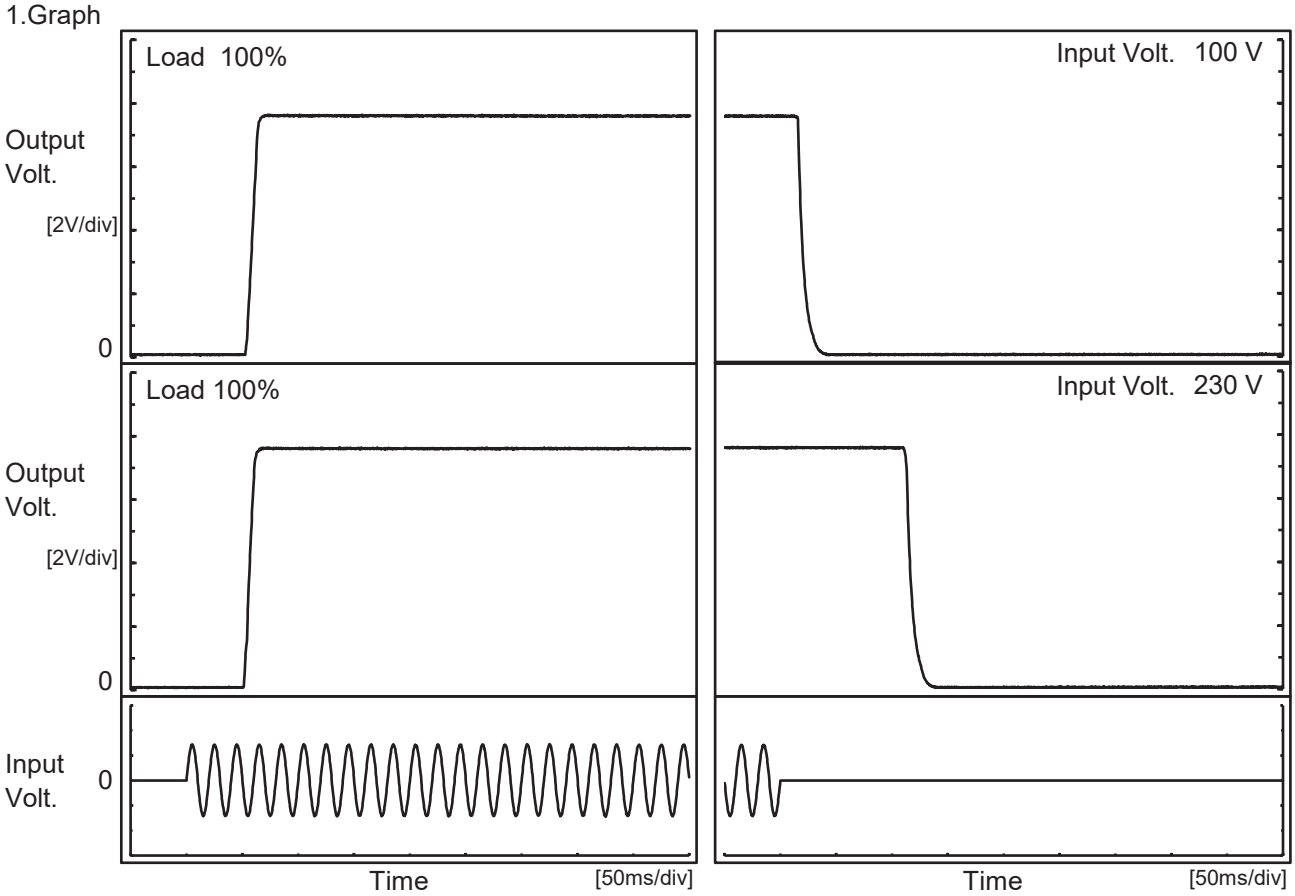

2.Values

[ms]

Input Volt. \ Time	Td	Tr	Ts	Th	Tf
100V	54.3	8.8	63.1	16.5	11.8
230V	52.0	8.5	60.5	113.5	12.0

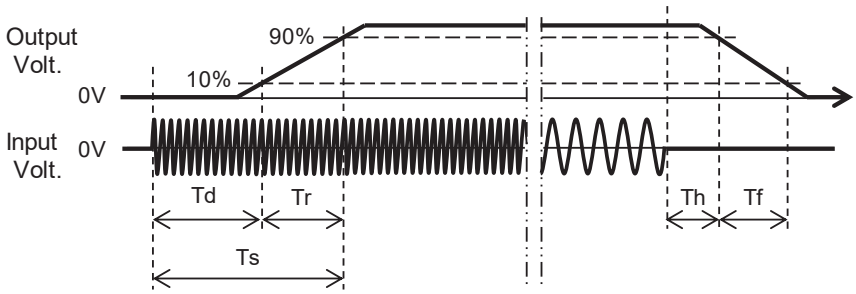

COSEL

Model	TECS10F-15
Item	Hold-Up Time
Object	+15V0.7A

Temperature 25°C
Testing Circuitry Figure A

1.Graph

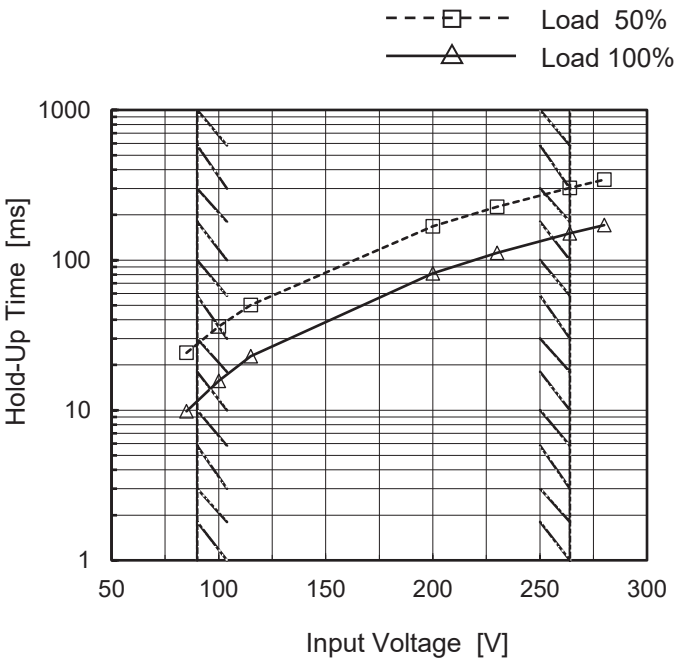

This duration covers from Shut-off of input voltage to the moment when output voltage descends to the rated range of voltage accuracy.
Note: Slanted line shows the range of the rated input voltage.

2.Values

Input Voltage [V]	Hold-Up Time [ms]	
	Load 50%	Load 100%
85	24	10
100	36	16
115	50	23
200	168	82
230	226	112
264	303	150
280	343	171
--	-	-
--	-	-

COSEL

Model	TECS10F-15
Item	Instantaneous Interruption Compensation
Object	+15V0.7A

Temperature 25°C
Testing Circuitry Figure A

1.Graph

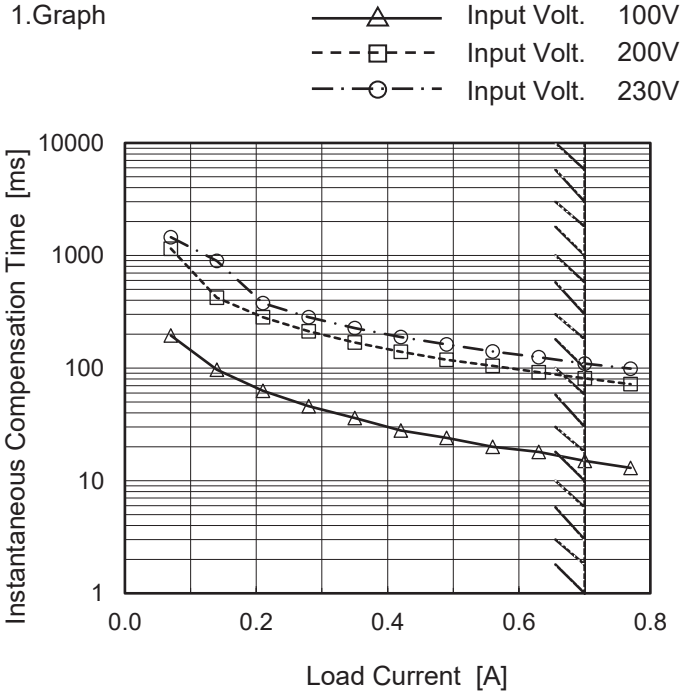

Note: Slanted line shows the range of the rated load current.

2.Values

Load Current [A]	Time [ms]		
	Input Volt. 100[V]	Input Volt. 200[V]	Input Volt. 230[V]
0.00	-	-	-
0.07	195	1153	1455
0.14	97	423	899
0.21	63	283	379
0.28	46	212	284
0.35	36	169	227
0.42	28	140	189
0.49	24	119	162
0.56	20	105	141
0.63	18	92	125
0.70	15	81	110
0.77	13	72	99

COSEL

Model	TECS10F-15
Item	Overcurrent Protection
Object	+15V0.7A

Temperature 25°C
Testing Circuitry Figure A

1.Graph

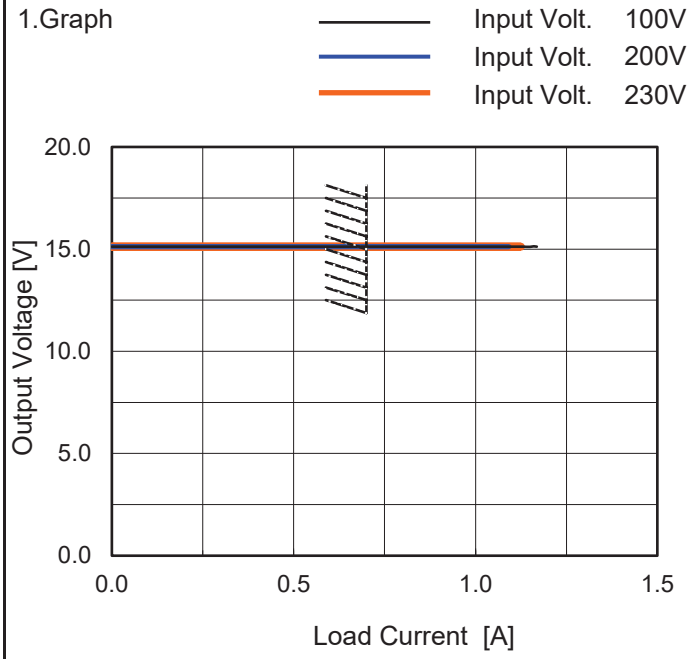

Note: Slanted line shows the range of the rated load current.

Overcurrent protection is Hiccup mode.

2.Values

Output Voltage [V]	Load Current [A]		
	Input Volt. 100[V]	Input Volt. 200[V]	Input Volt. 230[V]
15.0	1.17	1.09	1.12
14.5	-	-	-
14.0	-	-	-
13.0	-	-	-
12.0	-	-	-
11.0	-	-	-
10.0	-	-	-
8.0	-	-	-
6.0	-	-	-
4.0	-	-	-
2.0	-	-	-
1.0	-	-	-

COSEL

Model	TECS10F-15	
Item	Ambient Temperature Drift	Testing Circuitry Figure A
Object	+15V0.7A	

1.Values

Load 100%

Ambient Temperature[℃]	Output Voltage [V]		
	Input Volt. 100V	Input Volt. 200V	Input Volt. 230V
-20	15.108	15.109	15.109
25	15.124	15.125	15.125
60	15.112	15.114	15.114

Item	Minimum Input Voltage for Regulated Output Voltage	Testing Circuitry Figure A
Object	+15V0.7A	

1.Values

Ambient Temperature[℃]	Input Voltage [V]	
	Load 50%	Load 100%
-20	38	52
25	35	49
60	34	50

Item	Overvoltage Protection	Testing Circuitry Figure A
Object	+15V0.7A	

1.Values

Load 0%

Ambient Temperature[℃]	Operating Point [V]	
	Input Volt. 100V	Input Volt. 230V
-20	18.43	18.40
25	18.94	18.95
60	19.37	19.40

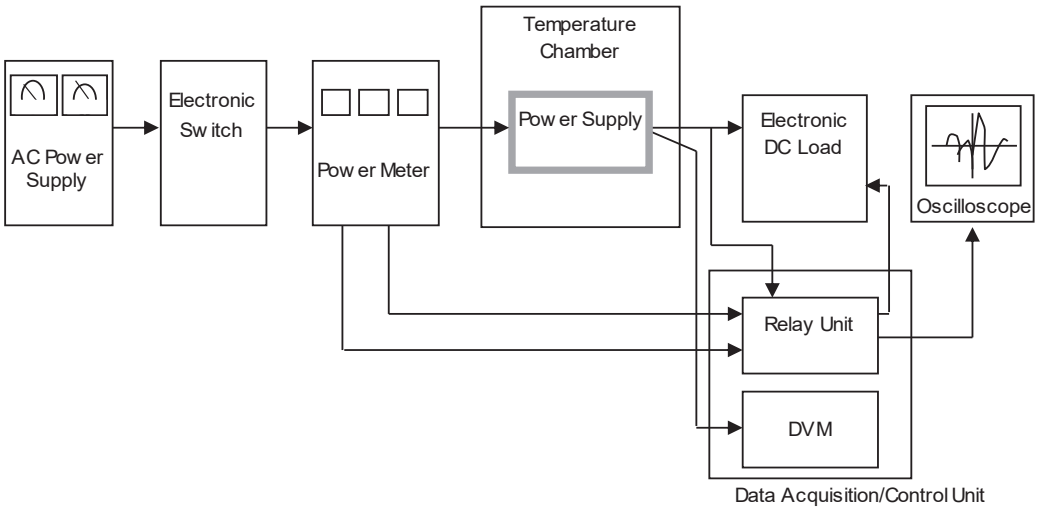

Figure A

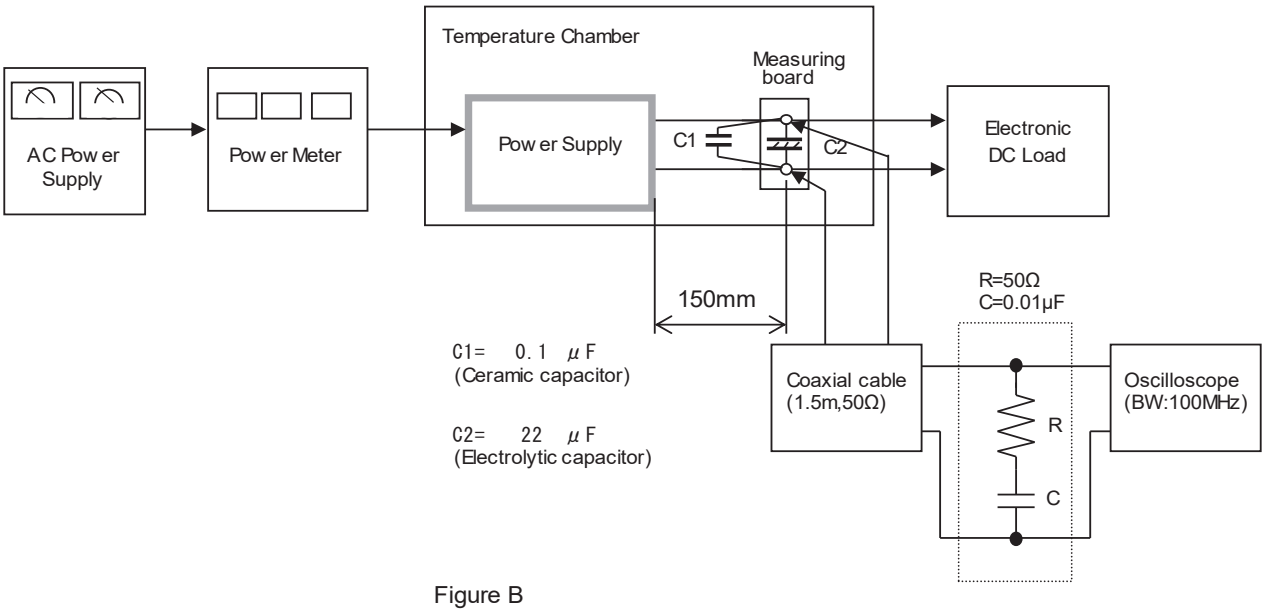

Figure B

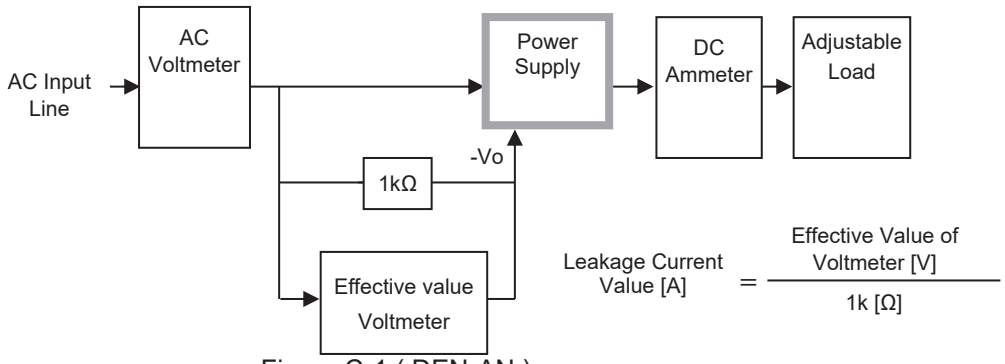

Figure C-1 (DEN-AN)

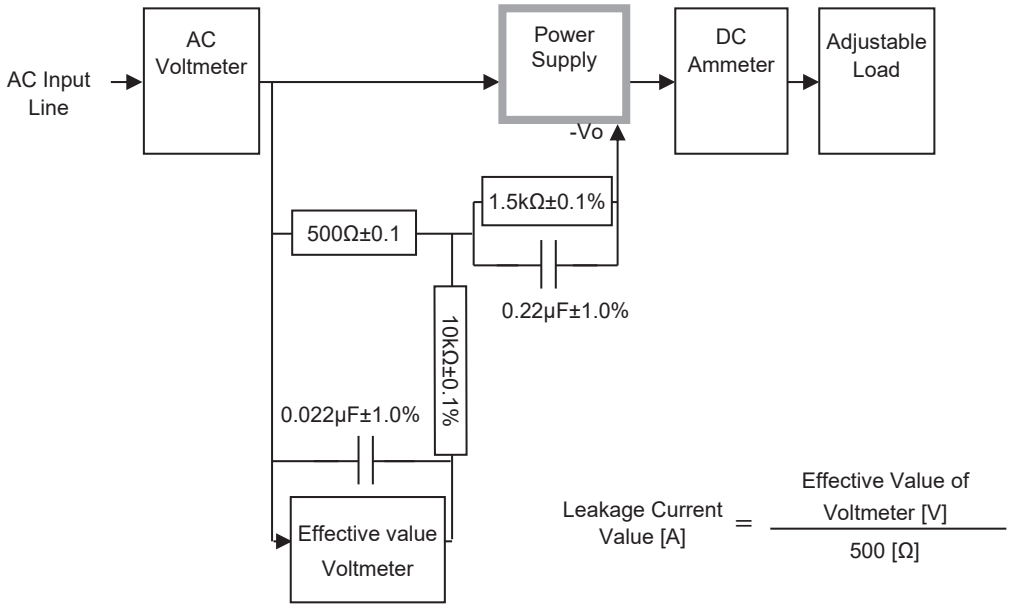

Figure C-2 (IEC62368-1 refer to IEC60990 Fig.4)

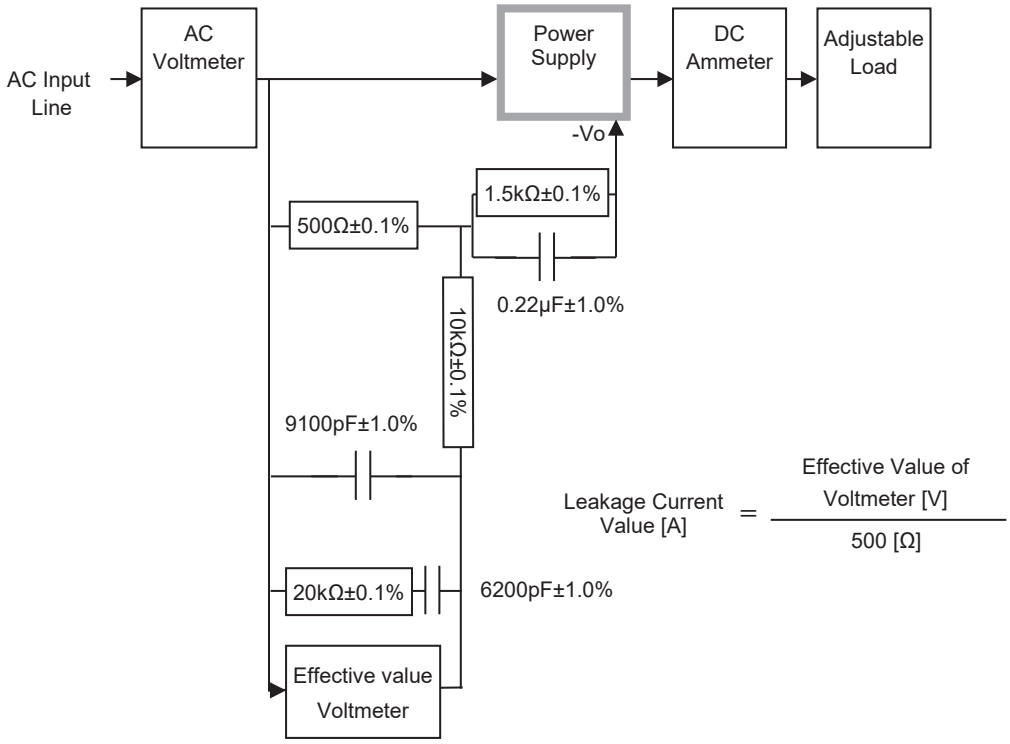

Figure C-3 (IEC62368-1 refer to IEC60990 Fig.5)