For Reference

TEST DATA OF PDA600F-48

Regulated DC Power Supply
May 28, 2025

Approved by : Yoshiaki Shimizu
Design Manager

Prepared by : Terumasa Araki
Design Engineer

COSEL CO.,LTD.

COSEL

CONTENTS

1.Input Current (by Load Current) · 1
2.Efficiency (by Load Current) · 2
3.Power Factor (by Load Current) · 3
4.Inrush Current · 4
5.Leakage Current · 5
6.Line Regulation · 6
7.Load Regulation · 7
8.Ripple-Noise · 7
9.Dynamic Load Response · 8
10.Rise and Fall Time · 9
11.Hold-Up Time · 10
12.Instantaneous Interruption Compensation · · · · · · · · · · · · · · · · · 11
13.Overcurrent Protection · 12
14.Ambient Temperature Drift · 13
15.Minimum Input Voltage for Regulated Output Voltage · · · · · · · · · · 13
16.Overvoltage Protection · 13
17.Figure of Testing Circuitry · 14
(Final Page 15)

COSEL

Model	PDA600F-48
Item	Input Current (by Load Current)
Object	————————

Temperature 25°C
Testing Circuitry Figure A

1.Graph

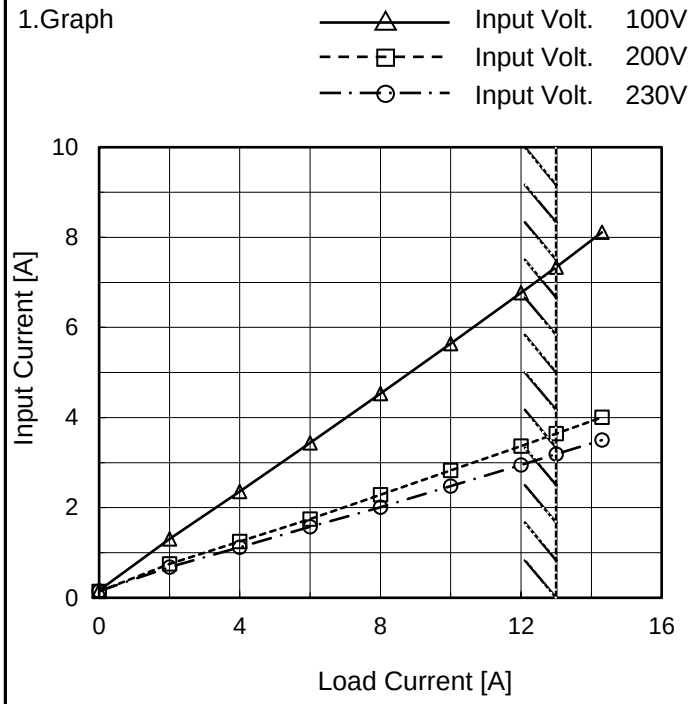

Note: Slanted line shows the range of the rated load current.

2.Values

Load Current [A]	Input Current [A]		
	Input Volt. 100[V]	Input Volt. 200[V]	Input Volt. 230[V]
0.0	0.163	0.140	0.148
2.0	1.306	0.749	0.681
4.0	2.361	1.251	1.123
6.0	3.435	1.749	1.575
8.0	4.534	2.288	2.013
10.0	5.640	2.827	2.477
12.0	6.773	3.369	2.949
13.0	7.340	3.643	3.187
14.3	8.110	4.003	3.499
--	-	-	-
--	-	-	-

BC-12159

COSEL

Model	PDA600F-48
Item	Efficiency (by Load Current)
Object	————————

Temperature 25°C
Testing Circuitry Figure A

1.Graph

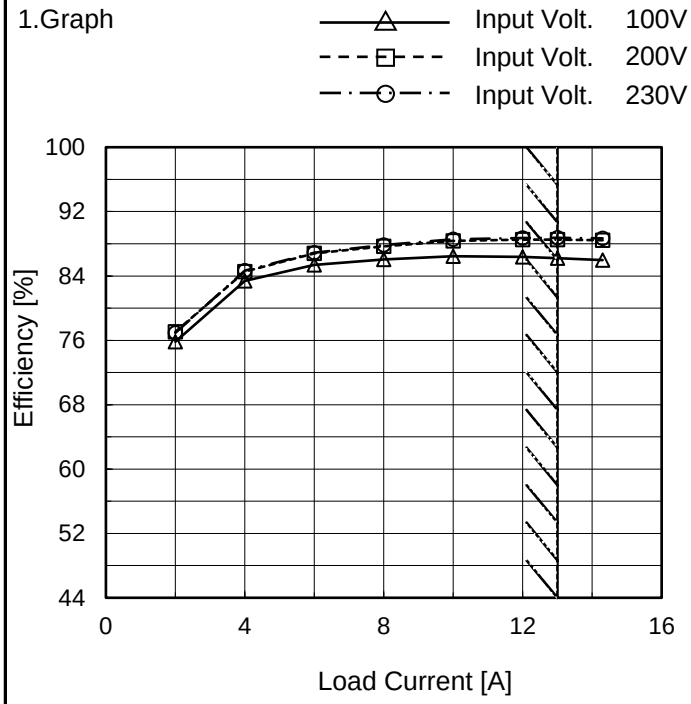

Note: Slanted line shows the range of the rated load current.

2.Values

Load Current [A]	Efficiency [%]		
	Input Volt. 100[V]	Input Volt. 200[V]	Input Volt. 230[V]
0.0	-	-	-
2.0	75.8	77.1	76.9
4.0	83.4	84.5	84.7
6.0	85.4	86.8	86.9
8.0	86.1	87.7	87.8
10.0	86.5	88.3	88.5
12.0	86.4	88.5	88.7
13.0	86.2	88.5	88.7
14.3	86.0	88.4	88.7
--	-	-	-
--	-	-	-

BC-12159

COSEL

Model	PDA600F-48
Item	Power Factor (by Load Current)
Object	————————

Temperature 25°C
Testing Circuitry Figure A

1.Graph

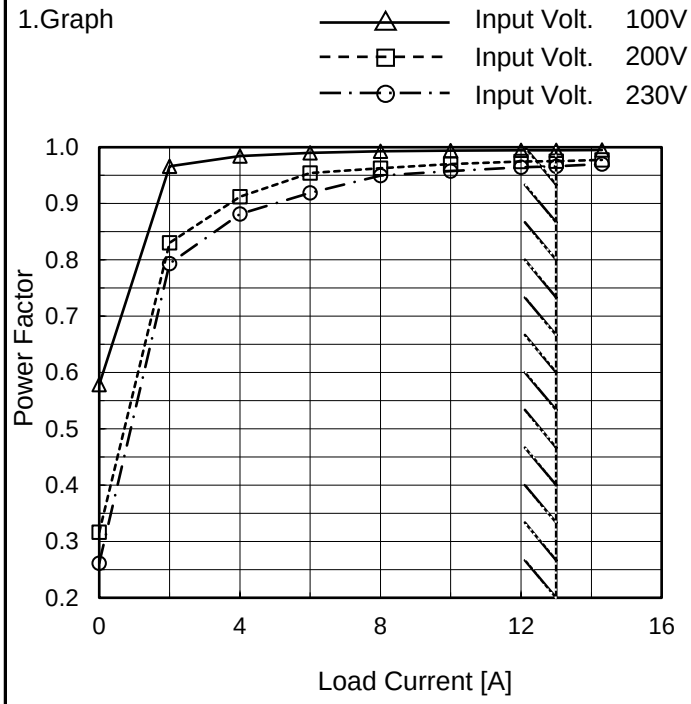

Note: Slanted line shows the range of the rated load current.

2.Values

Load Current [A]	Power Factor		
	Input Volt. 100[V]	Input Volt. 200[V]	Input Volt. 230[V]
0.0	0.579	0.316	0.262
2.0	0.966	0.830	0.793
4.0	0.984	0.912	0.882
6.0	0.990	0.954	0.919
8.0	0.993	0.963	0.949
10.0	0.994	0.970	0.958
12.0	0.994	0.975	0.965
13.0	0.995	0.975	0.966
14.3	0.995	0.978	0.970
--	-	-	-
--	-	-	-

BC-12159

COSEL

Model	PDA600F-48	
Item	Inrush Current	Temperature 25°C Testing Circuitry Figure A
Object	————————	

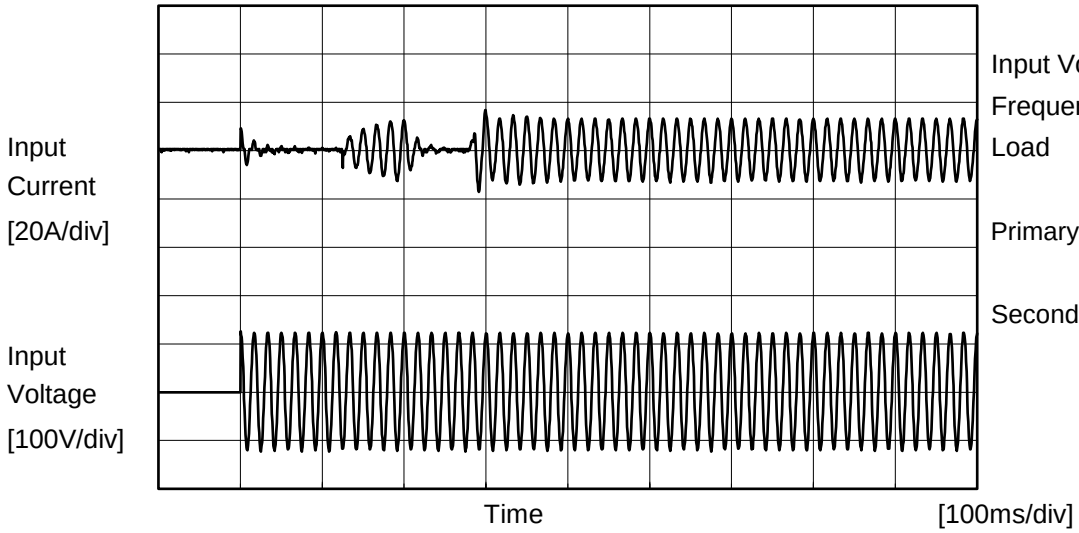

Input Voltage 100 V
Frequency 60 Hz
Load 100 %

Primary inrush current :
9.3 A
Secondary inrush current :
17.1 A

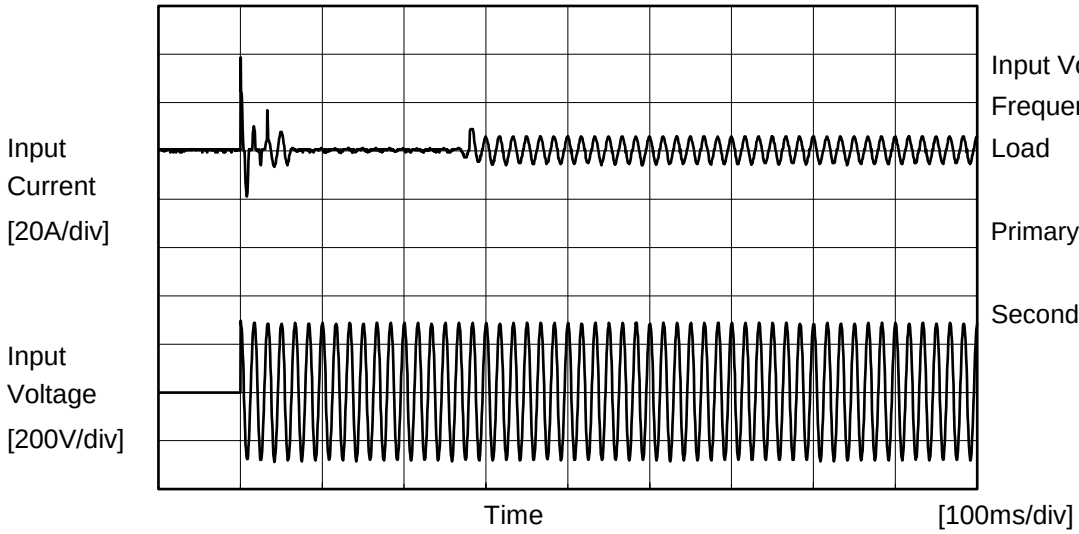

Input Voltage 230 V
Frequency 60 Hz
Load 100 %

Primary inrush current :
38.7 A
Secondary inrush current :
8.7 A

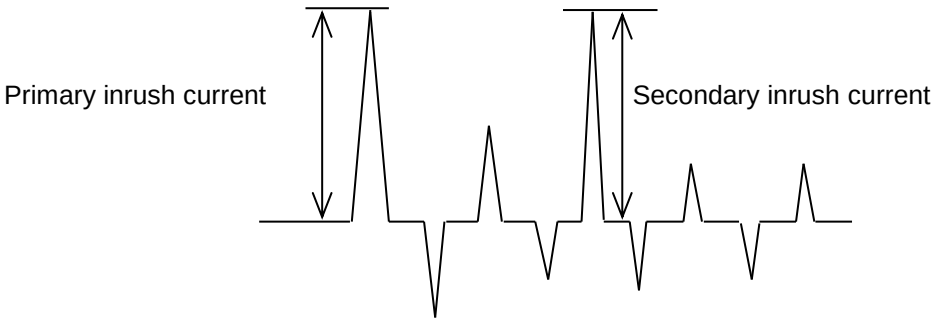

COSEL

Model	PDA600F-48	
Item	Leakage Current	Temperature 25°C Testing Circuitry Figure C
Object	――――――――――――	

1.Results

[mA]

Standards	Testing Circuitry	Measuring Method	Input Volt.			Note
			100 [V]	230 [V]	240 [V]	
DEN-AN	Figure C-1	Both phases	0.16	0.43	0.45	Operation
		One of phases	0.31	0.81	0.85	Stand by
IEC62368-1	Figure C-2	Both phases	0.16	0.42	0.45	Operation
		One of phases	0.31	0.80	0.84	Stand by
	Figure C-3	Both phases	0.16	0.42	0.44	Operation
		One of phases	0.31	0.79	0.83	Stand by

The value for "One of phases" is the reference value only.

2.Condition

Leakage current value is concluded after measuring both phases of AC input and by choosing the larger one.

COSEL

Model	PDA600F-48
Item	Line Regulation
Object	+48V13A

Temperature 25°C
Testing Circuitry Figure A

1.Graph

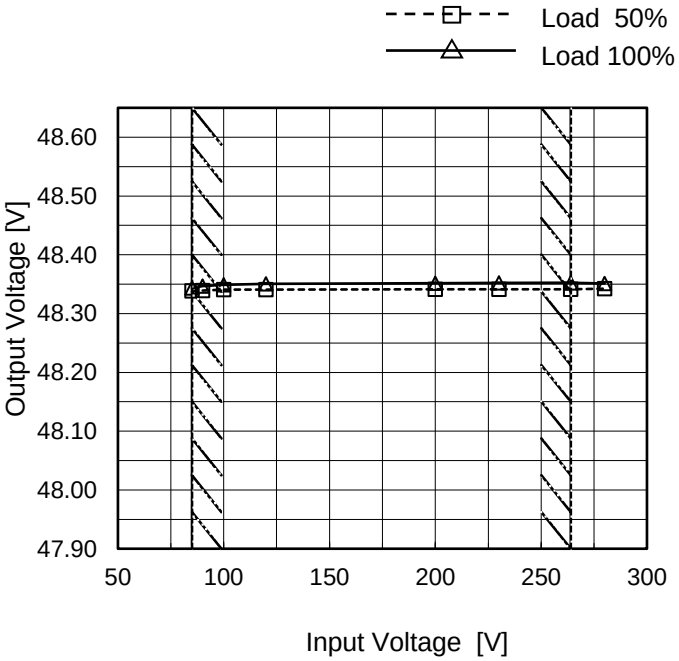

Note: Slanted line shows the range of the rated input voltage.

2.Values

Input Voltage [V]	Output Voltage [V]	
	Load 50%	Load 100%
85	48.338	48.343
90	48.339	48.347
100	48.341	48.349
120	48.341	48.351
200	48.341	48.352
230	48.341	48.352
264	48.341	48.353
280	48.342	48.351
--	-	-

BC-12159

COSEL

Model	PDA600F-48
Item	Load Regulation
Object	+48V13A

Temperature 25°C
Testing Circuitry Figure A

1.Graph

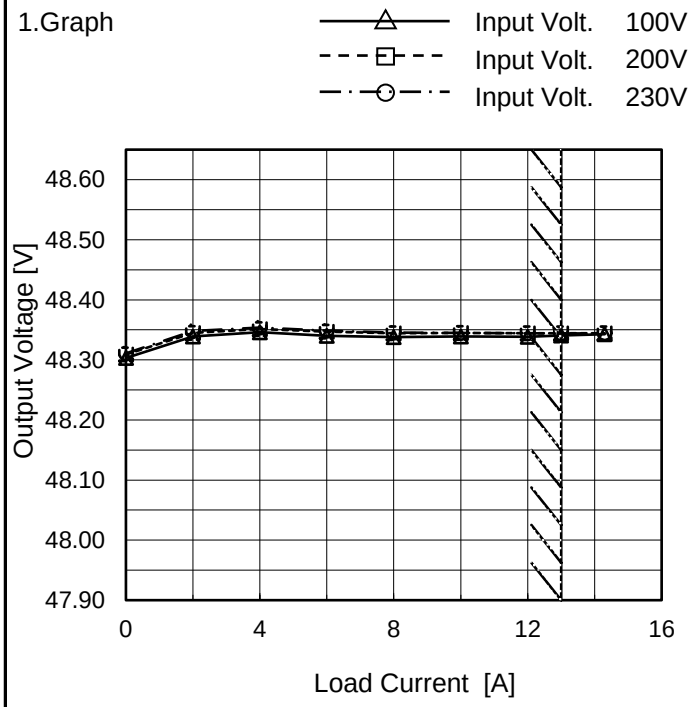

Note: Slanted line shows the range of the rated load current.

2.Values

Load Current [A]	Output Voltage [V]		
	Input Volt. 100[V]	Input Volt. 200[V]	Input Volt. 230[V]
0.0	48.303	48.309	48.311
2.0	48.339	48.345	48.348
4.0	48.346	48.351	48.354
6.0	48.340	48.347	48.348
8.0	48.338	48.344	48.345
10.0	48.339	48.345	48.345
12.0	48.339	48.344	48.345
13.0	48.340	48.344	48.344
14.3	48.343	48.344	48.344
--	--	--	--
--	--	--	--

Item	Ripple-Noise
Object	+48V13A

Temperature 25°C
Testing Circuitry Figure B

1.Graph

Input Voltage 230V
Load 100%

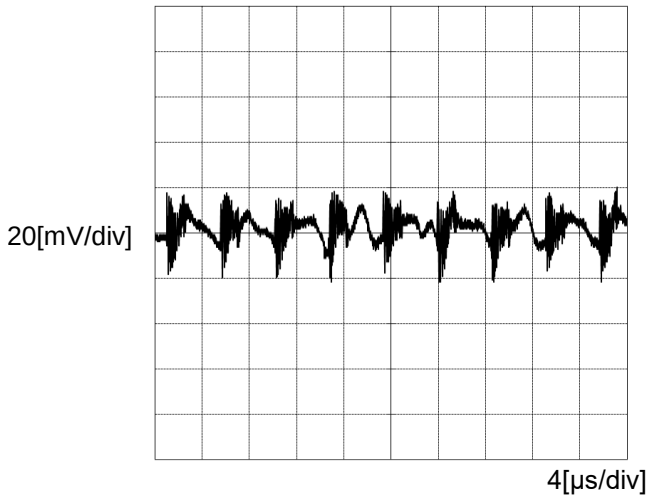

BC-12159

COSEL

Model	PDA600F-48	
Item	Dynamic Load Response	Temperature 25°C Testing Circuitry Figure A
Object	+48V13A	

Input Volt. 230 V

Cycle 1000 ms

Response. t1=t2=50µs. Typ

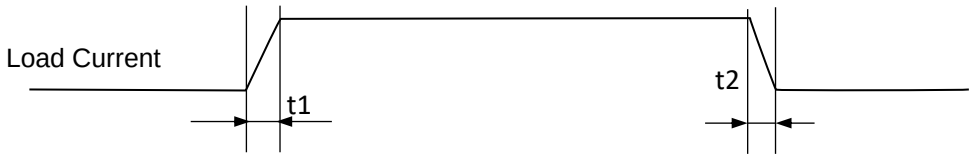

Load 0%(0A) ←→
Load 100%(13A)

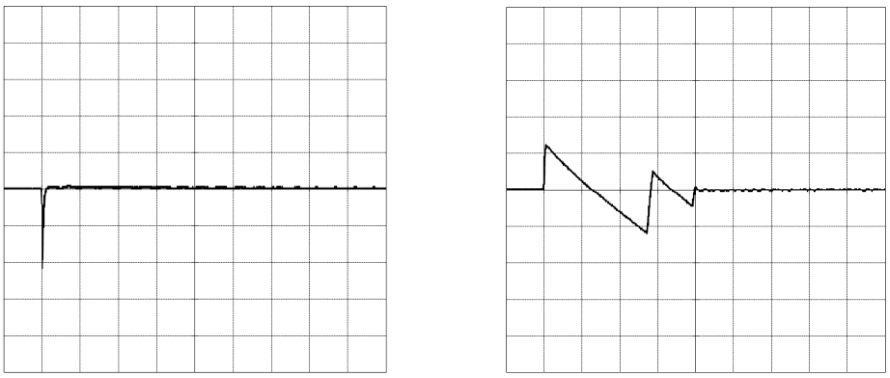

500[mV/div]

20[ms/div] 20[ms/div]

Load 50%(6.5A) ←→
Load 100%(13A)

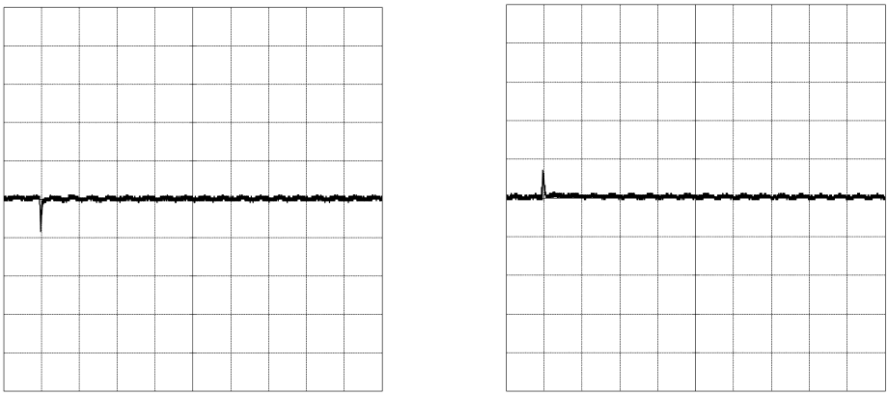

500[mV/div]

20[ms/div] 20[ms/div]

Load %(0A) ←→
Load 50%(6.5A)

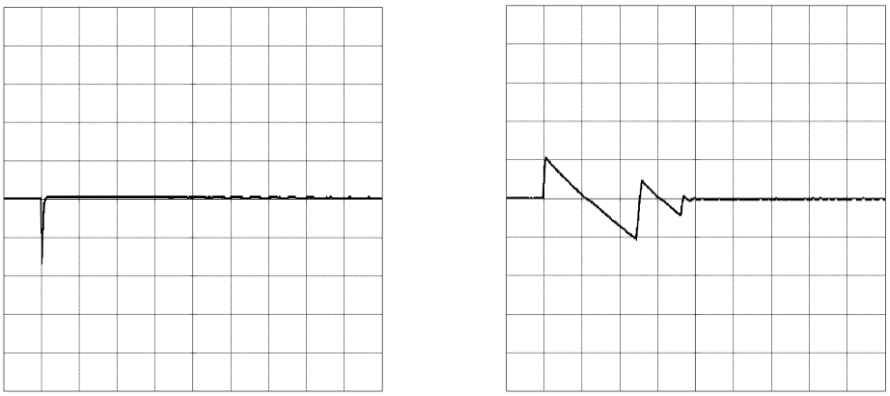

500[mV/div]

20[ms/div] 20[ms/div]

COSEL

Model	PDA600F-48	
Item	Rise and Fall Time	Temperature 25°C Testing Circuitry Figure A
Object	+48V13A	

1.Graph

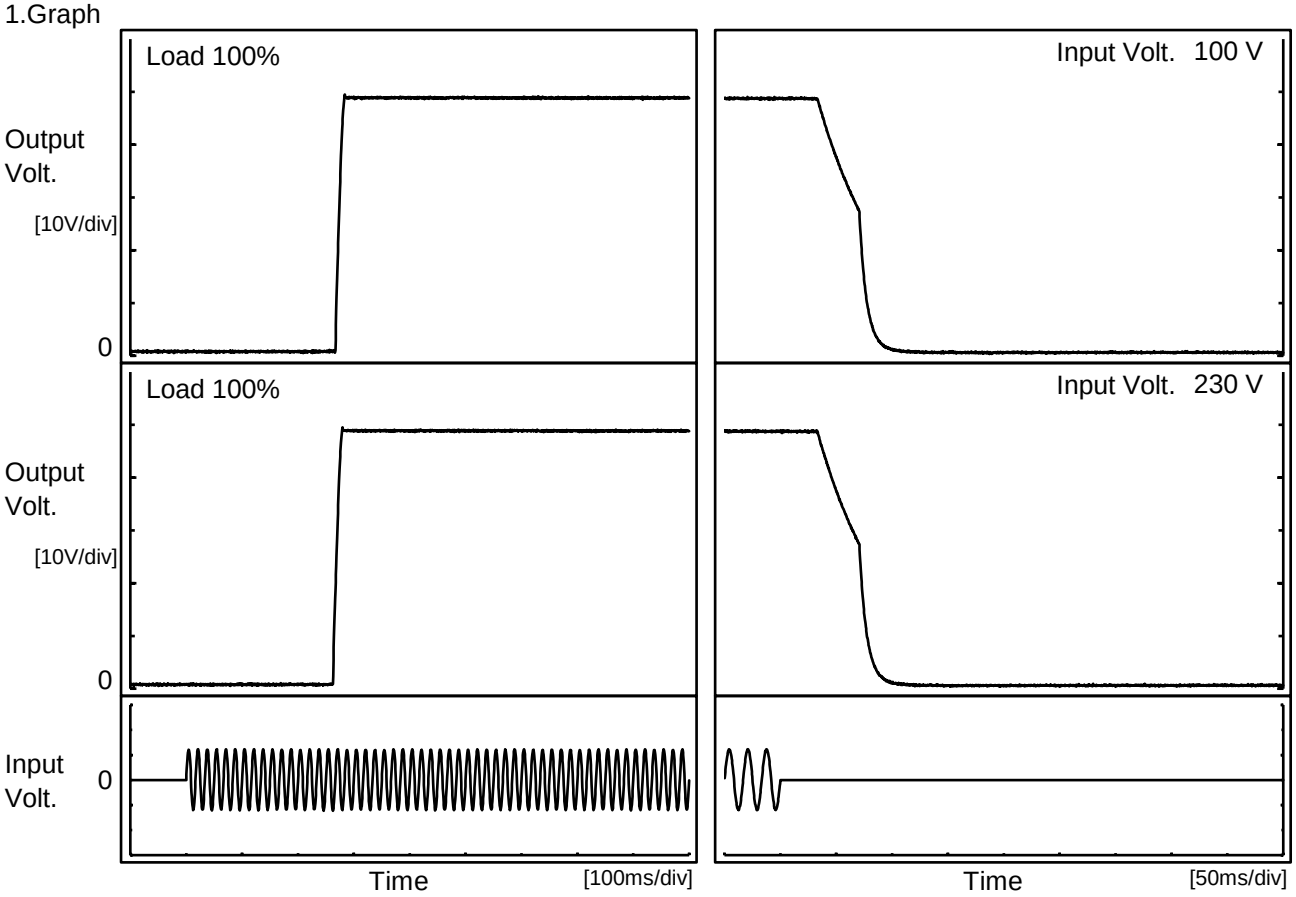

2.Values

[ms]

Input Volt. \ Time	Td	Tr	Ts	Th	Tf
100 V	268.0	11.5	279.5	40.3	42.5
230 V	263.5	12.0	275.5	40.0	42.5

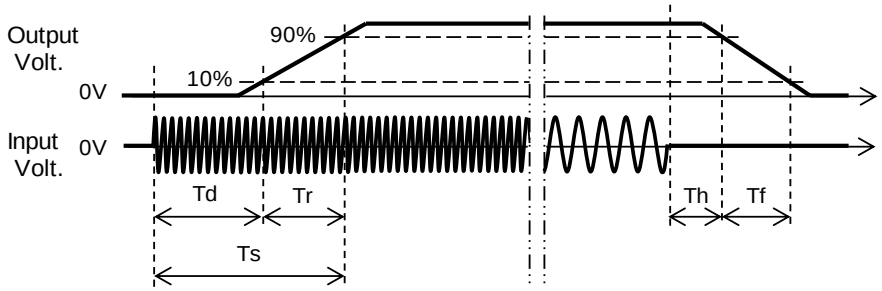

COSEL

Model	PDA600F-48
Item	Hold-Up Time
Object	+48V13A

Temperature 25°C
Testing Circuitry Figure A

1.Graph

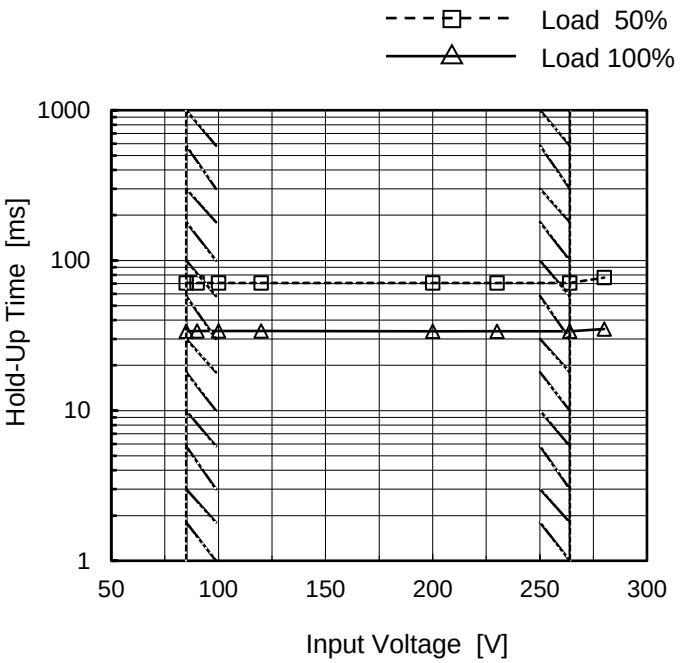

This duration covers from Shut-off of input voltage to the moment when output voltage descends to the rated range of voltage accuracy.
Note: Slanted line shows the range of the rated input voltage.

2.Values

Input Voltage [V]	Hold-Up Time [ms]	
	Load 50%	Load 100%
85	71	34
90	71	34
100	71	34
120	71	34
200	71	34
230	71	34
264	71	34
280	77	35
--	-	-

COSEL

Model	PDA600F-48
Item	Instantaneous Interruption Compensation
Object	+48V13A

Temperature 25°C
Testing Circuitry Figure A

1.Graph

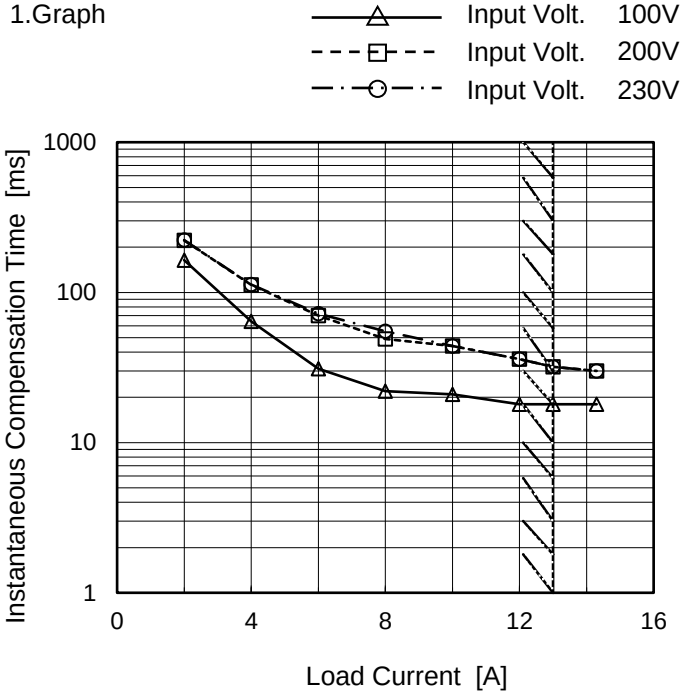

Note: Slanted line shows the range of the rated load current.

2.Values

Load Current [A]	Time [ms]		
	Input Volt. 100[V]	Input Volt. 200[V]	Input Volt. 230[V]
0.0	-	-	-
2.0	164	222	223
4.0	64	112	113
6.0	31	70	72
8.0	22	49	55
10.0	21	44	44
12.0	18	36	36
13.0	18	32	32
14.3	18	30	30
--	-	-	-
--	-	-	-

BC-12159

COSEL

Model	PDA600F-48
Item	Overcurrent Protection
Object	+48V13A

Temperature 25°C
Testing Circuitry Figure A

1.Graph

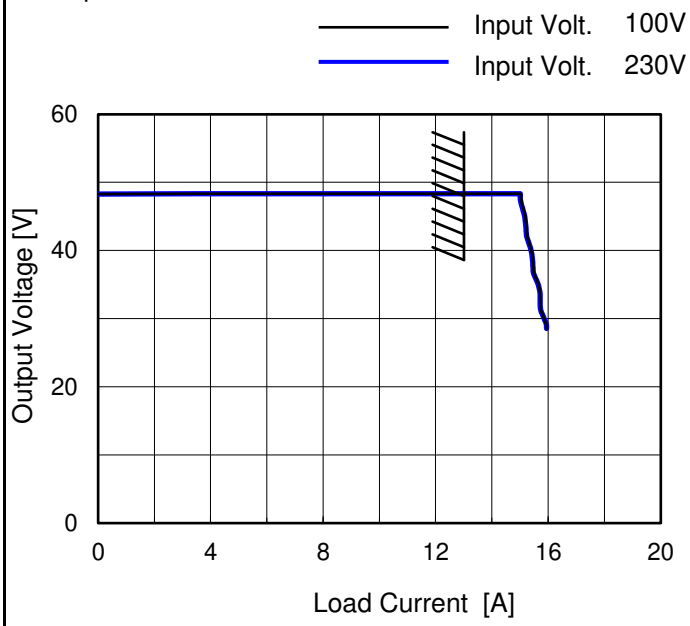

Note: Slanted line shows the range of the rated load current.

Intermittent operation occurs when the output voltage is from 28.8V to 0V.

2.Values

Output Voltage [V]	Load Current [A]	
	Input Volt. 100[V]	Input Volt. 230[V]
45.6	15.14	15.12
43.2	15.04	15.01
38.4	15.46	15.45
33.6	15.71	15.71
28.8	15.94	15.94
--	-	-
--	-	-
--	-	-
--	-	-
--	-	-
--	-	-
--	-	-

COSEL

Model	PDA600F-48	
Item	Ambient Temperature Drift	Testing Circuitry Figure A
Object	+48V13A	

1.Values

Load 100%

Ambient Temperature[℃]	Output Voltage [V]		
	Input Volt. 100V	Input Volt. 200V	Input Volt. 230V
-20	48.134	48.136	48.135
25	48.407	48.411	48.412
50	48.403	48.405	48.409

Item	Minimum Input Voltage for Regulated Output Voltage	Testing Circuitry Figure A
Object	+48V13A	

1.Values

Ambient Temperature[℃]	Input Voltage [V]	
	Load 50%	Load 100%
-20	67	67
25	67	67
50	67	67

Item	Overvoltage Protection	Testing Circuitry Figure A
Object	+48V13A	

1.Values

Load 0%

Ambient Temperature[℃]	Operating Point [V]	
	Input Volt. 100V	Input Volt. 230V
-20	72.04	72.04
25	72.33	72.33
50	72.43	72.44

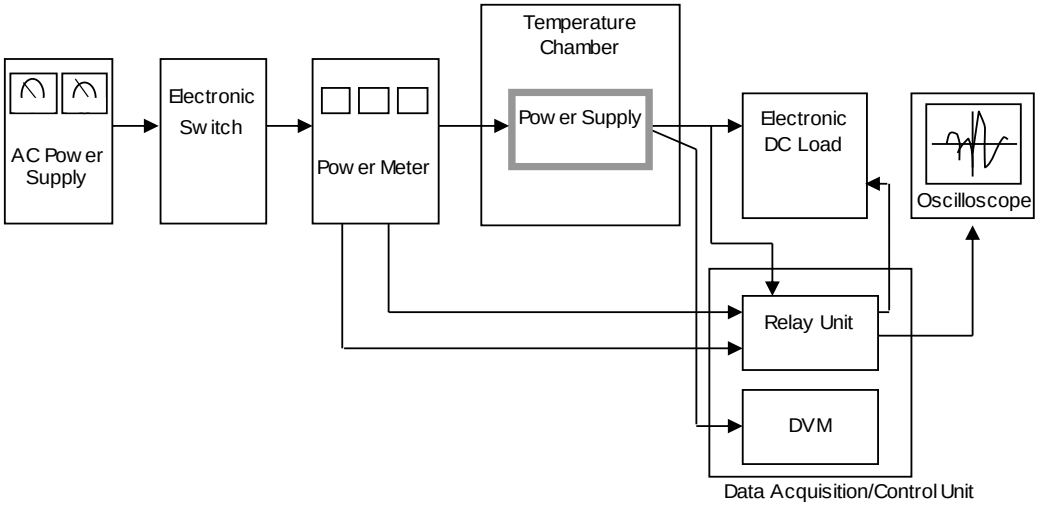

Figure A

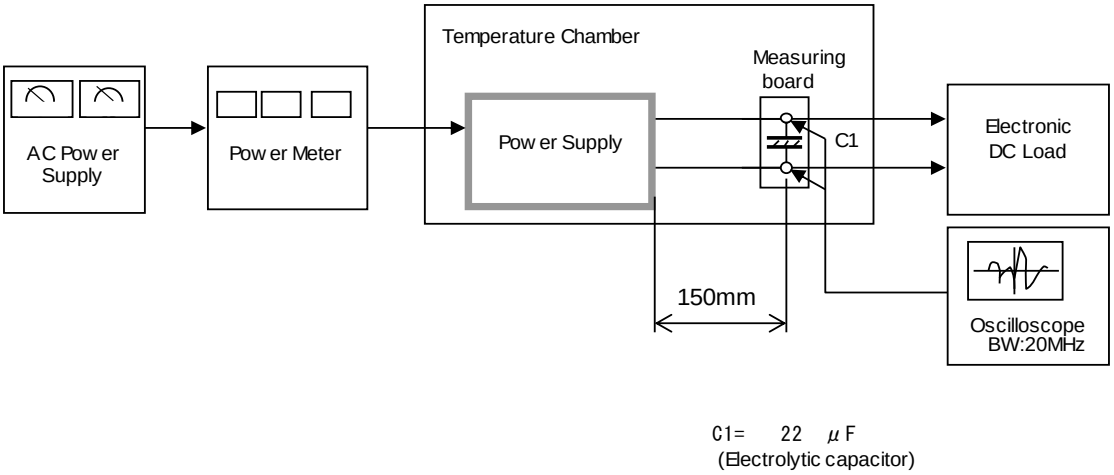

Figure B

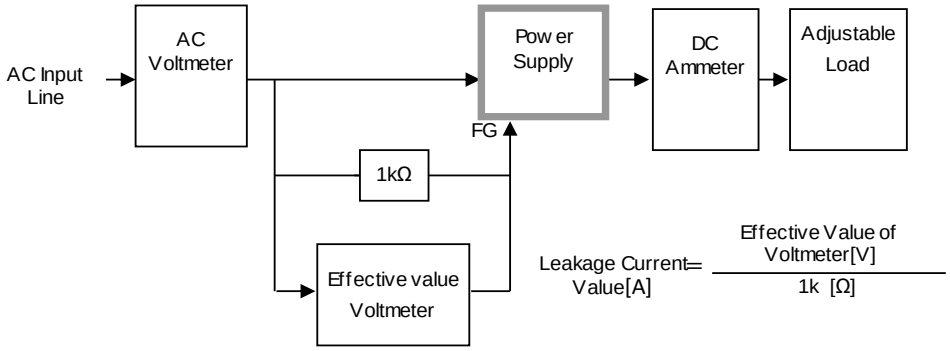

Figure C-1 (DEN-AN)

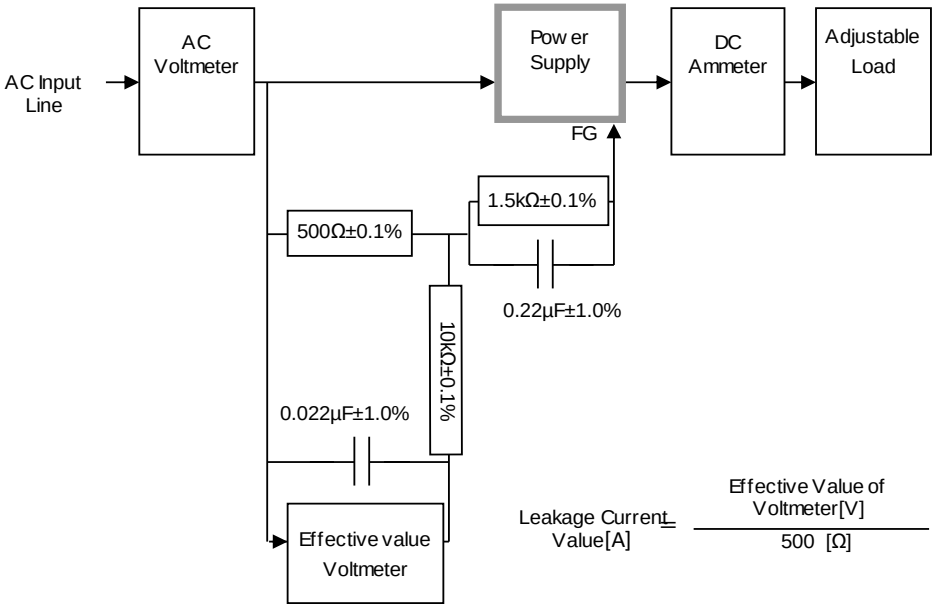

Figure C-2 (IEC62368-1 refer to IEC60990 Fig.4)

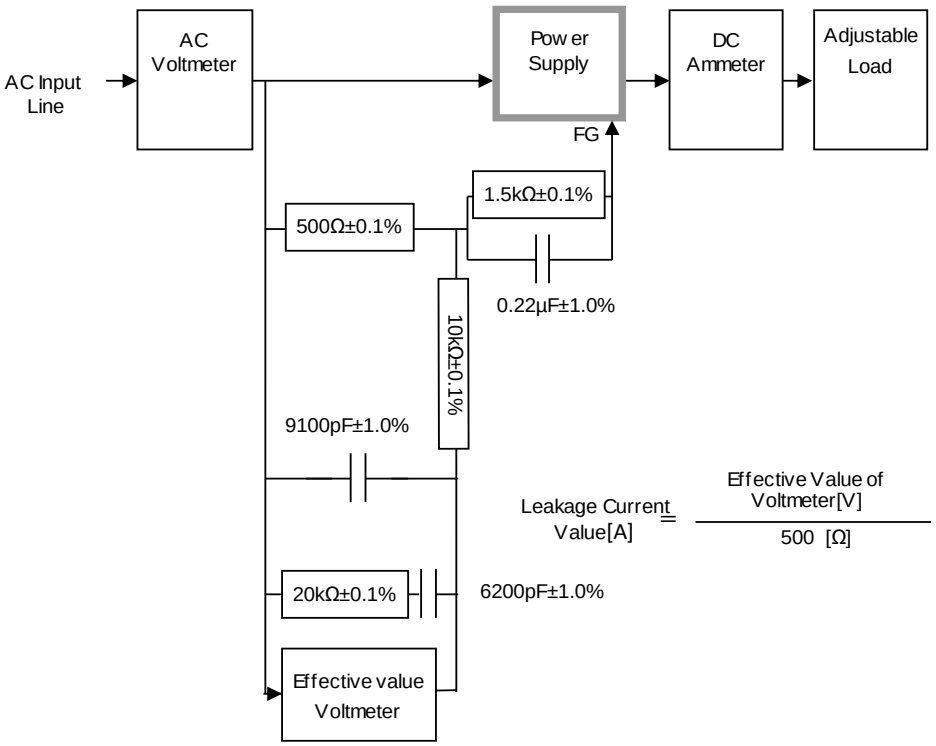

Figure C-3 (IEC62368-1 refer to IEC60990 Fig.5)