COSEL

For Reference

TEST DATA OF PDA150F-24

Regulated DC Power Supply
December 16, 2024

Approved by : Tetsukazu Okamoto
Design Manager

Prepared by : Karki Shankar
Design Engineer

COSEL CO.,LTD.

COSEL

CONTENTS

1.Input Current (by Load Current) · 1
2.Efficiency (by Load Current) · 2
3.Power Factor (by Load Current) · 3
4.Inrush Current · 4
5.Leakage Current · 5
6.Line Regulation · 6
7.Load Regulation · 7
8.Ripple-Noise · 7
9.Dynamic Load Response · 8
10.Rise and Fall Time · 9
11.Hold-Up Time · 10
12.Instantaneous Interruption Compensation · · · · · · · · · · · · · · · · 11
13.Overcurrent Protection · 12
14.Ambient Temperature Drift · 13
15.Minimum Input Voltage for Regulated Output Voltage · · · · · · · · · 13
16.Overvoltage Protection · 13
17.Figure of Testing Circuitry · 14
(Final Page 15)

COSEL

Model	PDA150F-24
Item	Input Current (by Load Current)
Object	————————

Temperature 25°C
Testing Circuitry Figure A

1.Graph

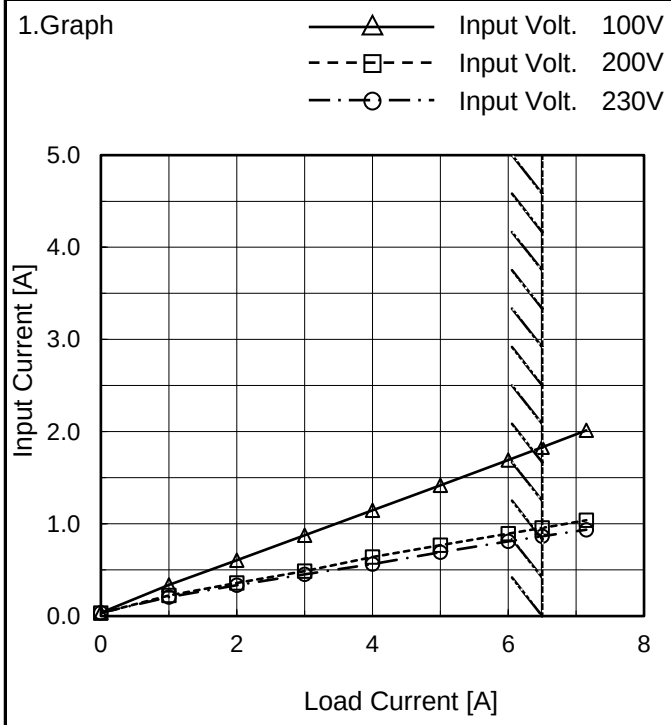

Note: Slanted line shows the range of the rated load current.

2.Values

Load Current [A]	Input Current [A]		
	Input Volt. 100[V]	Input Volt. 200[V]	Input Volt. 230[V]
0.00	0.036	0.032	0.036
1.00	0.337	0.223	0.208
2.00	0.606	0.359	0.335
3.00	0.875	0.489	0.451
4.00	1.147	0.639	0.565
5.00	1.419	0.769	0.694
6.00	1.694	0.893	0.809
6.50	1.831	0.956	0.865
7.15	2.014	1.039	0.937
--	-	-	-
--	-	-	-

BC-12022

COSEL

Model	PDA150F-24
Item	Efficiency (by Load Current)
Object	————————

Temperature 25°C
Testing Circuitry Figure A

1.Graph

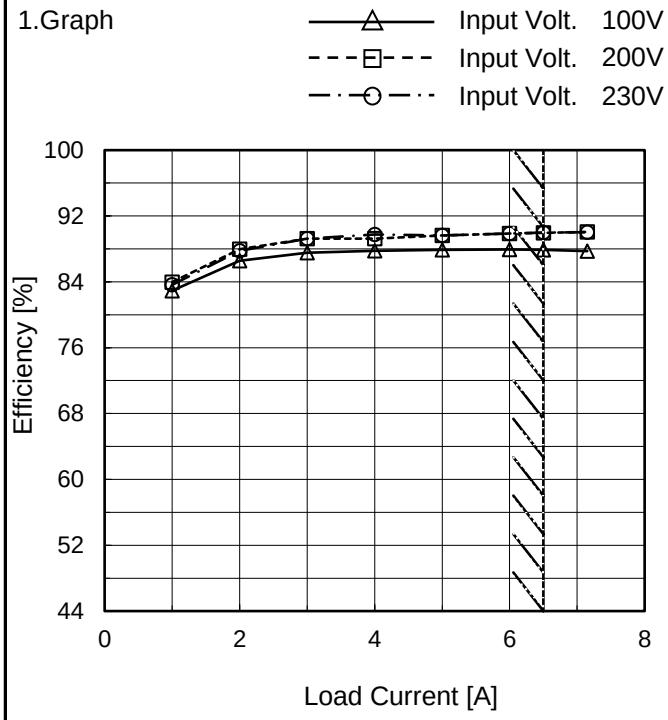

Note: Slanted line shows the range of the rated load current.

2.Values

Load Current [A]	Efficiency [%]		
	Input Volt. 100[V]	Input Volt. 200[V]	Input Volt. 230[V]
0.00	-	-	-
1.00	82.9	84.0	83.6
2.00	86.6	88.0	87.8
3.00	87.5	89.2	89.2
4.00	87.8	89.3	89.8
5.00	87.9	89.6	89.6
6.00	87.9	89.9	89.9
6.50	87.9	90.0	90.0
7.15	87.7	90.1	90.0
--	-	-	-
--	-	-	-

COSEL

Model	PDA150F-24
Item	Power Factor (by Load Current)
Object	————————

Temperature 25°C
Testing Circuitry Figure A

1.Graph

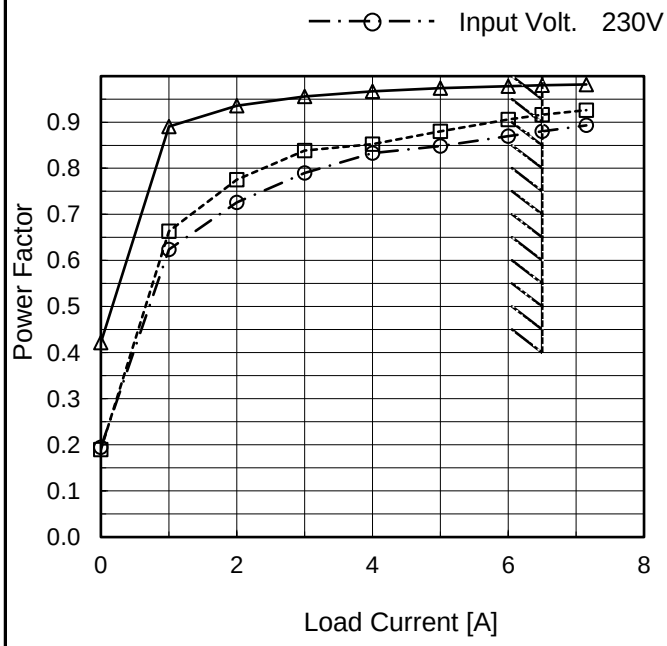

Note: Slanted line shows the range of the rated load current.

2.Values

Load Current [A]	Power Factor		
	Input Volt. 100[V]	Input Volt. 200[V]	Input Volt. 230[V]
0.00	0.422	0.190	0.195
1.00	0.891	0.664	0.624
2.00	0.936	0.776	0.726
3.00	0.956	0.838	0.790
4.00	0.967	0.852	0.833
5.00	0.974	0.880	0.848
6.00	0.978	0.906	0.870
6.50	0.980	0.916	0.880
7.15	0.982	0.926	0.893
--	-	-	-
--	-	-	-

BC-12022

COSEL

Model	PDA150F-24		
Item	Inrush Current	Temperature	25°C
		Testing Circuitry	Figure A
Object	————————		

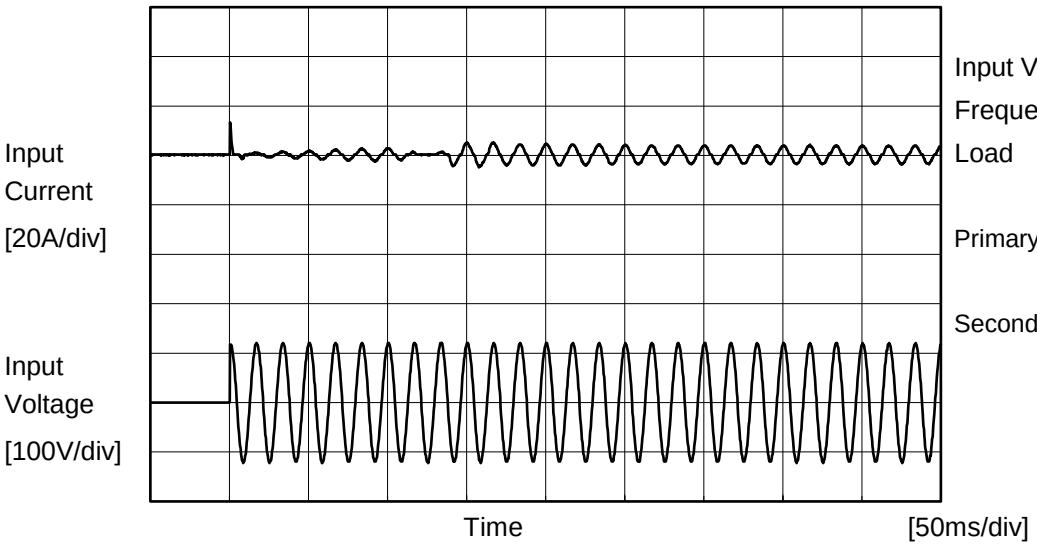

Input Voltage 100 V
Frequency 60 Hz
Load 100 %

Primary inrush current : 13.4 A
Secondary inrush current : 5.1 A

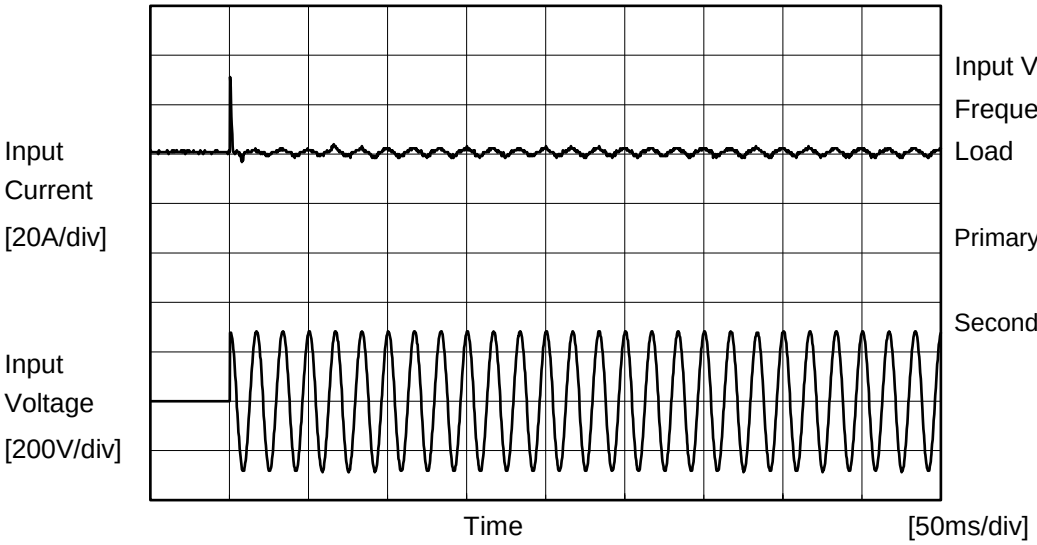

Input Voltage 230 V
Frequency 60 Hz
Load 100 %

Primary inrush current : 31.2 A
Secondary inrush current : 3.5 A

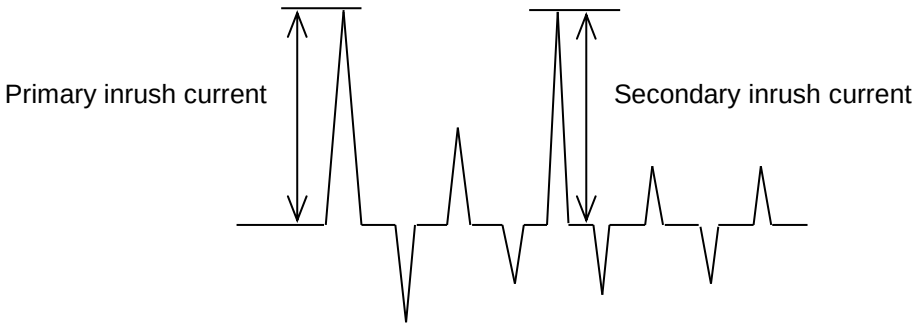

COSEL

Model	PDA150F-24		
Item	Leakage Current	Temperature	25°C
		Testing Circuitry	Figure C
Object	――――――――――		

1.Results

[mA]

Standards	Testing Circuitry	Measuring Method	Input Volt.			Note
			100 [V]	230 [V]	240 [V]	
DEN-AN	Figure C-1	Both phases	0.15	0.37	0.39	Operation
		One of phases	0.28	0.71	0.74	Stand by
IEC62368-1	Figure C-2	Both phases	0.14	0.36	0.38	Operation
		One of phases	0.27	0.69	0.72	Stand by
	Figure C-3	Both phases	0.14	0.35	0.37	Operation
		One of phases	0.27	0.68	0.71	Stand by

The value for "One of phases" is the reference value only.

2.Condition

Leakage current value is concluded after measuring both phases of AC input and by choosing the larger one.

COSEL

Model	PDA150F-24
Item	Line Regulation
Object	+24V6.5A

Temperature 25°C
Testing Circuitry Figure A

1.Graph

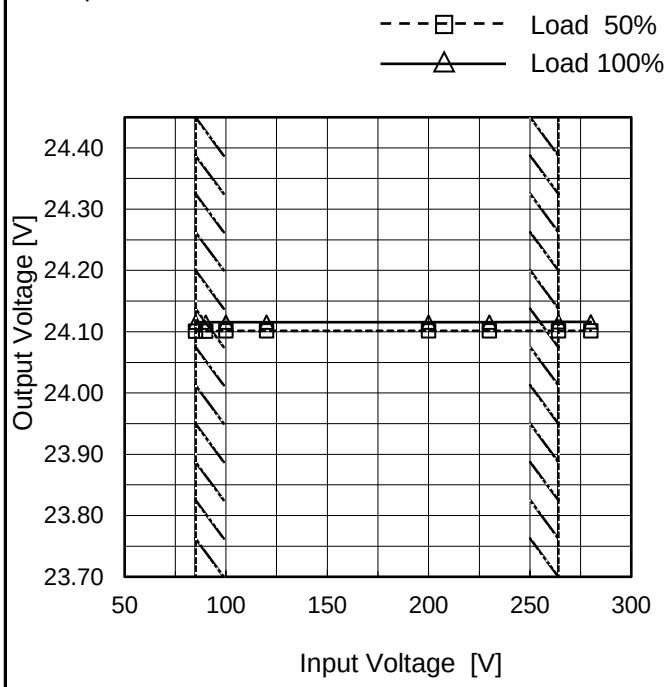

Note: Slanted line shows the range of the rated input voltage.

2.Values

Input Voltage [V]	Output Voltage [V]	
	Load 50%	Load 100%
85	24.101	24.116
90	24.101	24.116
100	24.101	24.116
120	24.101	24.116
200	24.102	24.116
230	24.102	24.116
264	24.102	24.116
280	24.102	24.116
--	-	-

BC-12022

COSEL

Model	PDA150F-24
Item	Load Regulation
Object	+24V6.5A

Temperature 25°C
Testing Circuitry Figure A

1.Graph

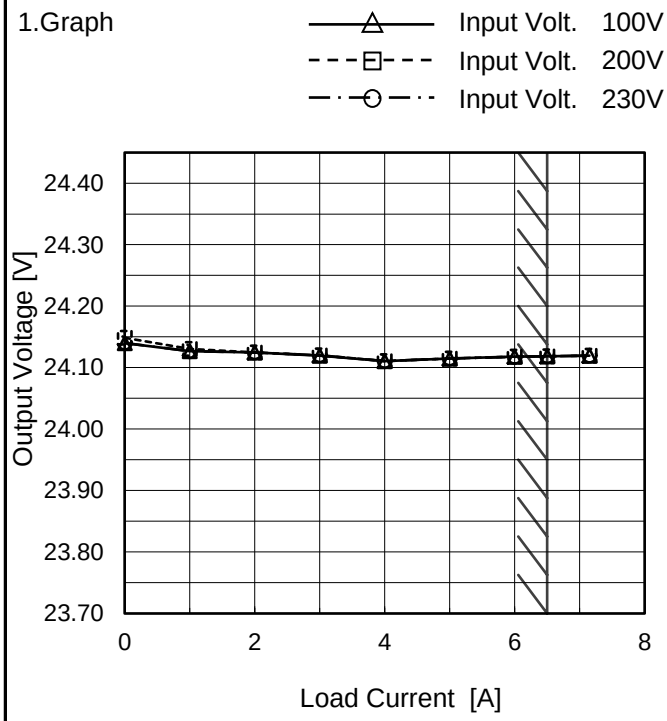

Note: Slanted line shows the range of the rated load current.

2.Values

Load Current [A]	Output Voltage [V] Input Volt. 100[V]	Input Volt. 200[V]	Input Volt. 230[V]
0.00	24.140	24.149	24.140
1.00	24.127	24.131	24.127
2.00	24.125	24.125	24.125
3.00	24.120	24.120	24.120
4.00	24.111	24.111	24.111
5.00	24.115	24.115	24.115
6.00	24.118	24.118	24.118
6.50	24.119	24.119	24.119
7.15	24.120	24.120	24.120
--	--	--	--
--	--	--	--

Item	Ripple-Noise
Object	+24V6.5A

Temperature 25°C
Testing Circuitry Figure B

1.Graph

Input Voltage 230V
Load 100%

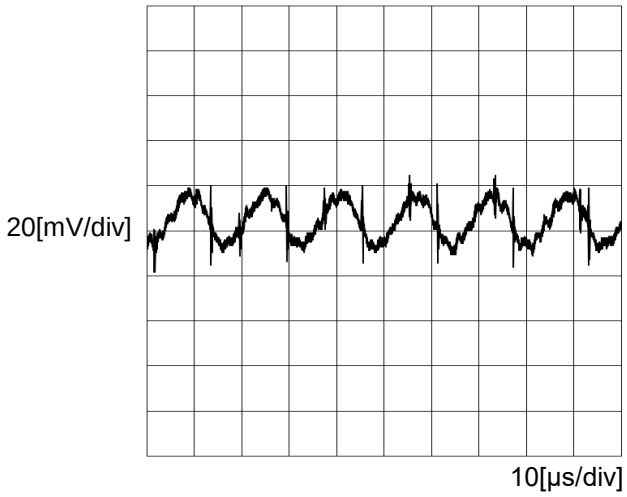

COSEL

Model	PDA150F-24
Item	Dynamic Load Response
Object	+24V6.5A

Temperature 25°C
Testing Circuitry Figure A

Input Volt. 230 V
Cycle 1000 ms

Response. t1=t2=50µs. Typ

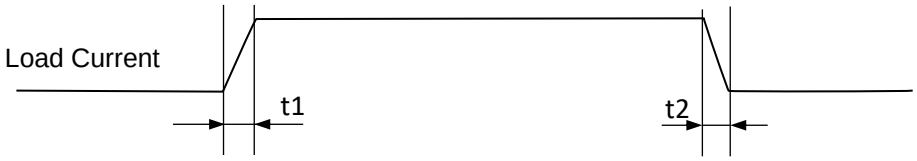

Load 0%(0A) ←→
Load 100%(6.5A)

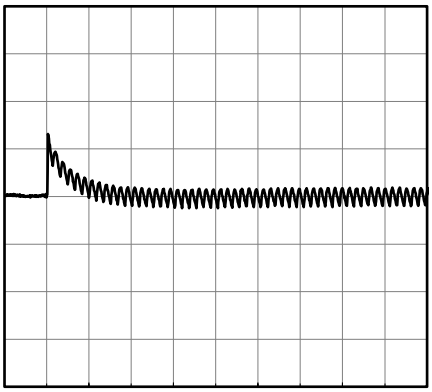

200[mV/div]

4[ms/div]

10[ms/div]

Load 50%(3.25A) ←→
Load 100%(6.5A)

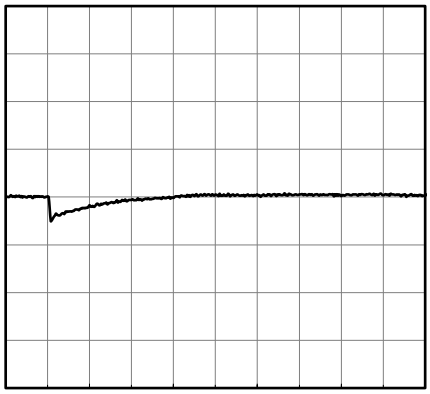

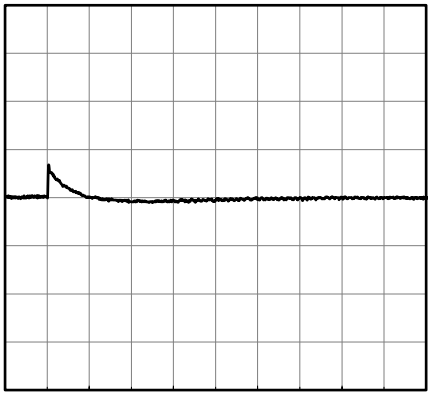

200[mV/div]

4[ms/div]

10[ms/div]

Load 0%(0A) ←→
Load 50%(3.25A)

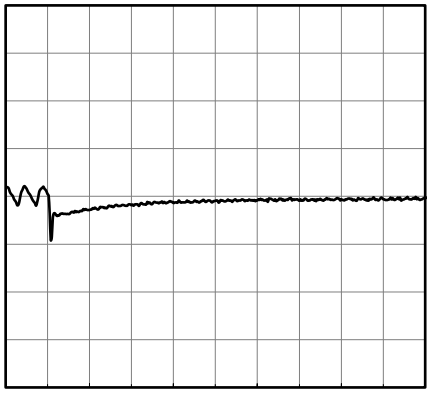

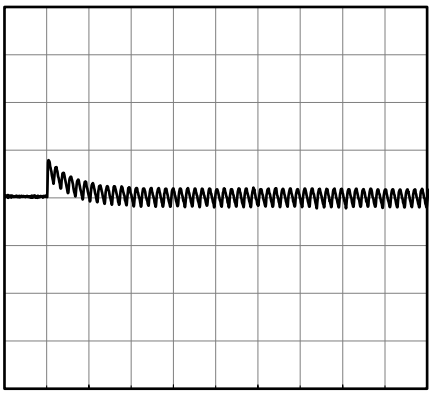

200[mV/div]

4[ms/div]

10[ms/div]

COSEL

Model	PDA150F-24
Item	Rise and Fall Time
Object	+24V6.5A

Temperature 25°C
Testing Circuitry Figure A

1.Graph

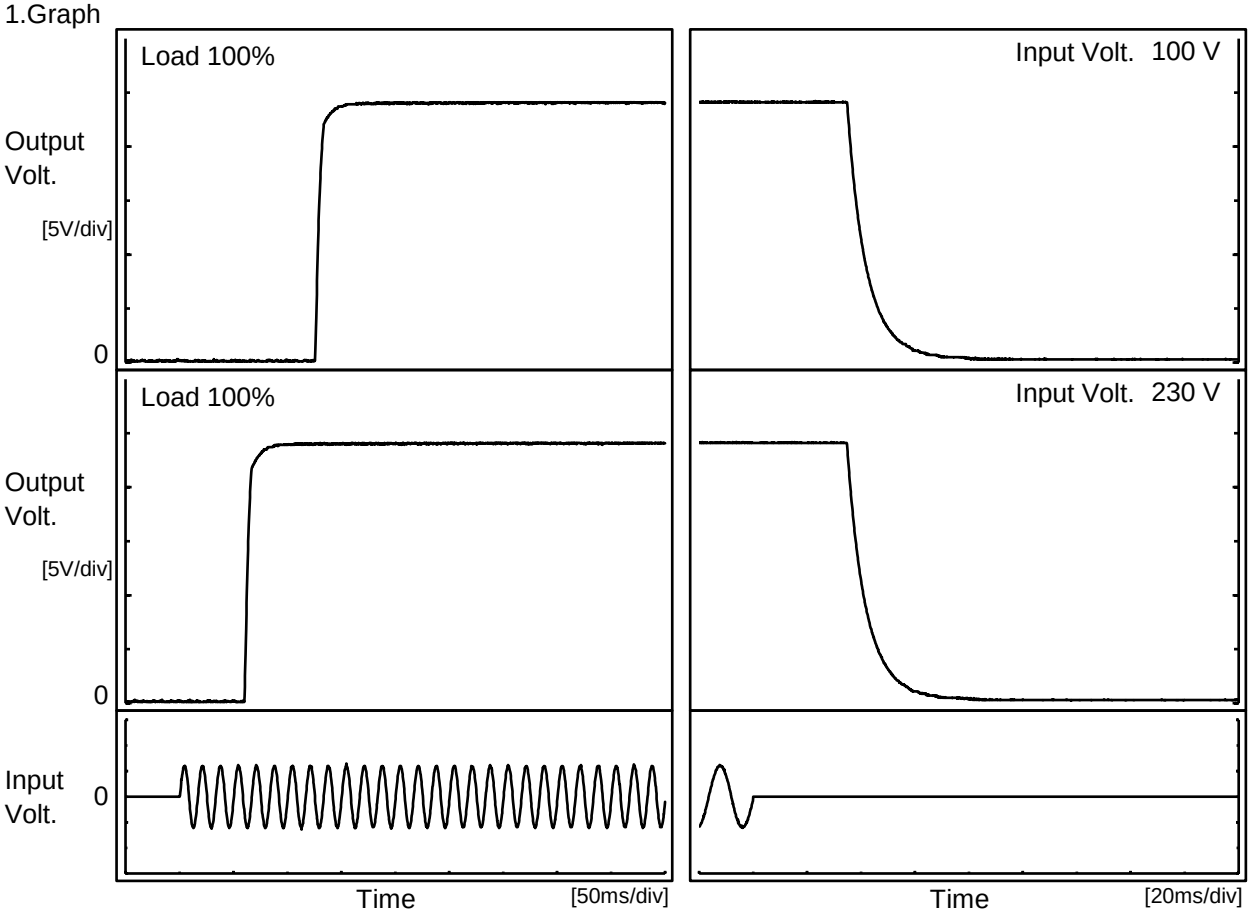

2.Values

[ms]

Input Volt. \ Time	Td	Tr	Ts	Th	Tf
100 V	126.5	7.0	133.5	35.5	16.2
230 V	61.0	6.3	67.3	35.4	16.2

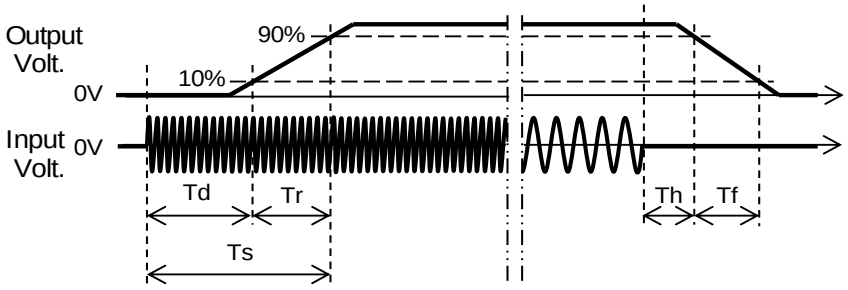

BC-12022

COSEL

Model	PDA150F-24
Item	Hold-Up Time
Object	+24V6.5A

Temperature 25°C
Testing Circuitry Figure A

1.Graph

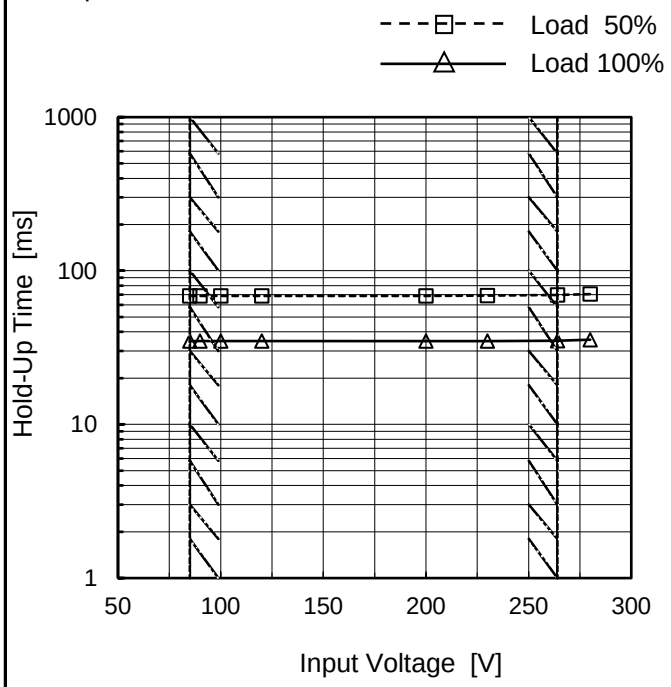

This duration covers from Shut-off of input voltage to the moment when output voltage descends to the rated range of voltage accuracy.
Note: Slanted line shows the range of the rated input voltage.

2.Values

Input Voltage [V]	Hold-Up Time [ms]	
	Load 50%	Load 100%
85	69	35
90	69	35
100	69	35
120	69	35
200	69	35
230	69	35
264	70	35
280	71	36
--	-	-

BC-12022

COSEL

Model	PDA150F-24
Item	Instantaneous Interruption Compensation
Object	+24V6.5A

Temperature 25°C
Testing Circuitry Figure A

1.Graph

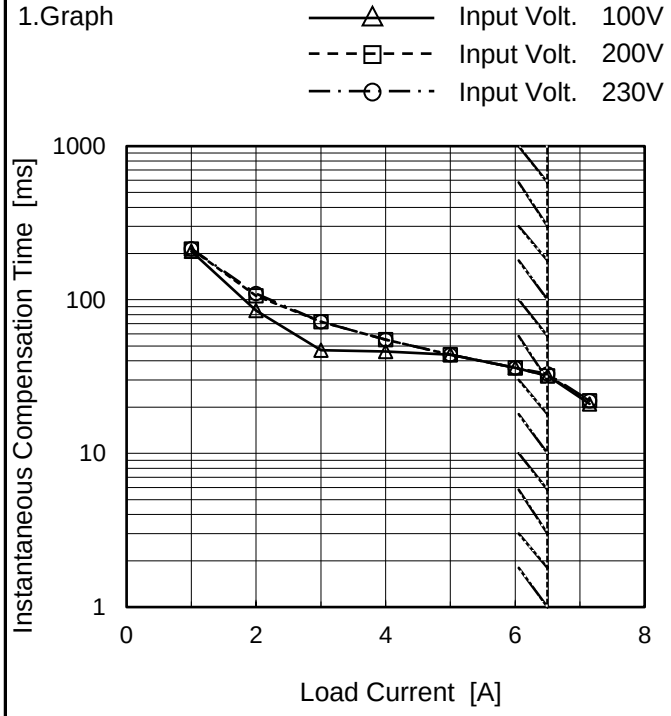

Note: Slanted line shows the range of the rated load current.

2.Values

Load Current [A]	Time [ms]		
	Input Volt. 100[V]	Input Volt. 200[V]	Input Volt. 230[V]
0.00	-	-	-
1.00	207	214	215
2.00	85	106	110
3.00	47	72	72
4.00	46	55	55
5.00	44	44	44
6.00	36	36	36
6.50	32	32	33
7.15	21	22	22
--	-	-	-
--	-	-	-

BC-12022

COSEL

Model	PDA150F-24
Item	Overcurrent Protection
Object	+24V6.5A

Temperature 25°C
Testing Circuitry Figure A

1.Graph

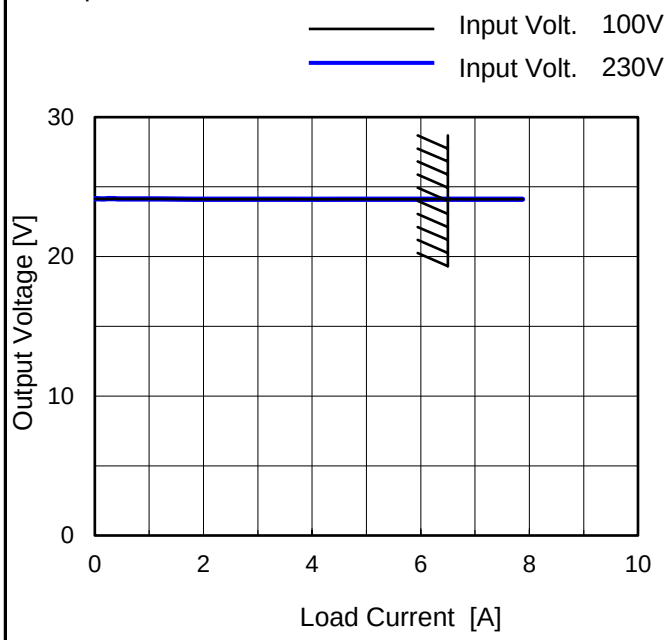

Note: Slanted line shows the range of the rated load current.

2.Values

Output Voltage [V]	Load Current [A]	
	Input Volt. 100[V]	Input Volt. 230[V]
24.00	7.88	7.87
22.80	-	-
21.60	-	-
19.20	-	-
16.80	-	-
14.40	-	-
12.00	-	-
9.60	-	-
7.20	-	-
4.80	-	-
2.40	-	-
0.00	-	-

COSEL

Model	PDA150F-24
Item	Ambient Temperature Drift
Object	+24V6.5A

Testing Circuitry Figure A

1.Values

Load 100%

Ambient Temperature[℃]	Output Voltage [V]		
	Input Volt. 100V	Input Volt. 200V	Input Volt. 230V
-10	24.046	24.046	24.046
25	24.116	24.116	24.116
50	24.133	24.133	24.132

Item	Minimum Input Voltage for Regulated Output Voltage
Object	+24V6.5A

Testing Circuitry Figure A

1.Values

Ambient Temperature[℃]	Input Voltage [V]	
	Load 50%	Load 100%
-10	39	58
25	41	55
50	40	54

Item	Overvoltage Protection
Object	+24V6.5A

Testing Circuitry Figure A

1.Values

Load 0%

Ambient Temperature[℃]	Operating Point [V]	
	Input Volt. 100V	Input Volt. 230V
-20	32.40	32.40
25	33.13	33.13
50	33.71	33.72

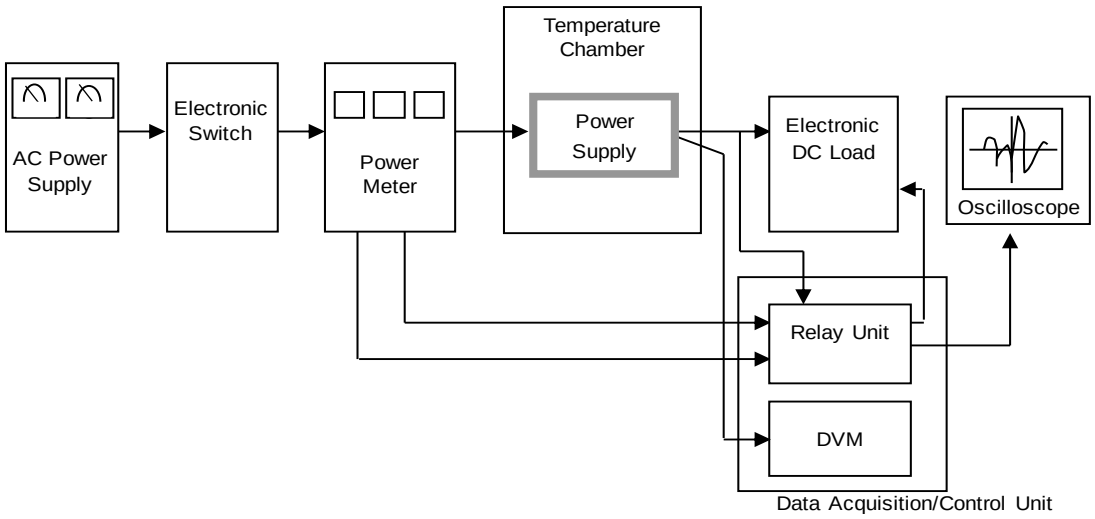

Figure A

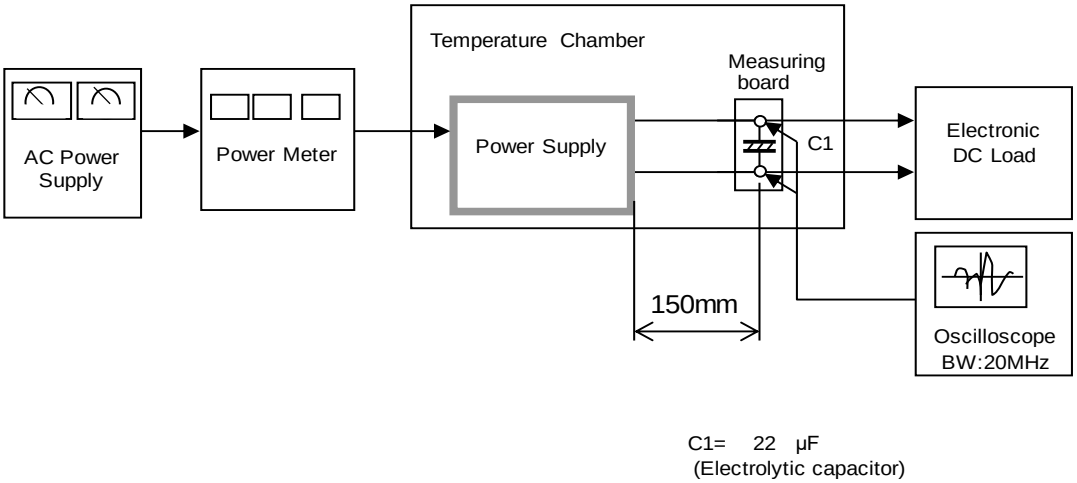

Figure B

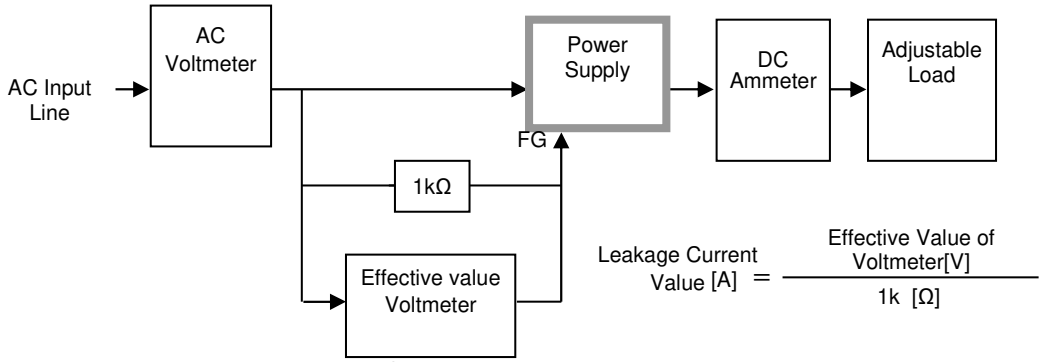

Figure C-1 (DEN-AN)

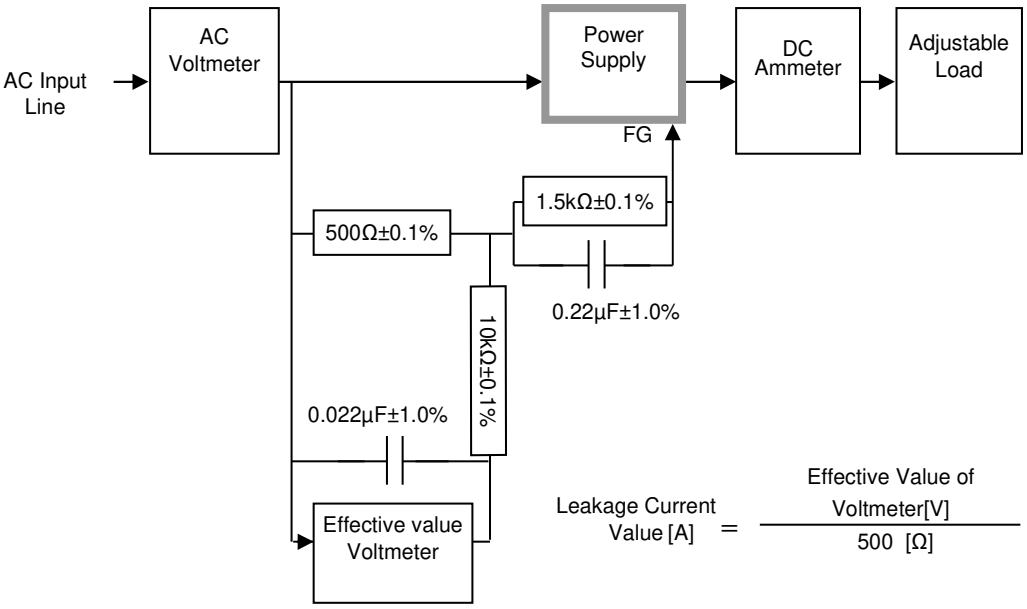

Figure C-2 (IEC62368-1 refer to IEC60990 Fig.4)

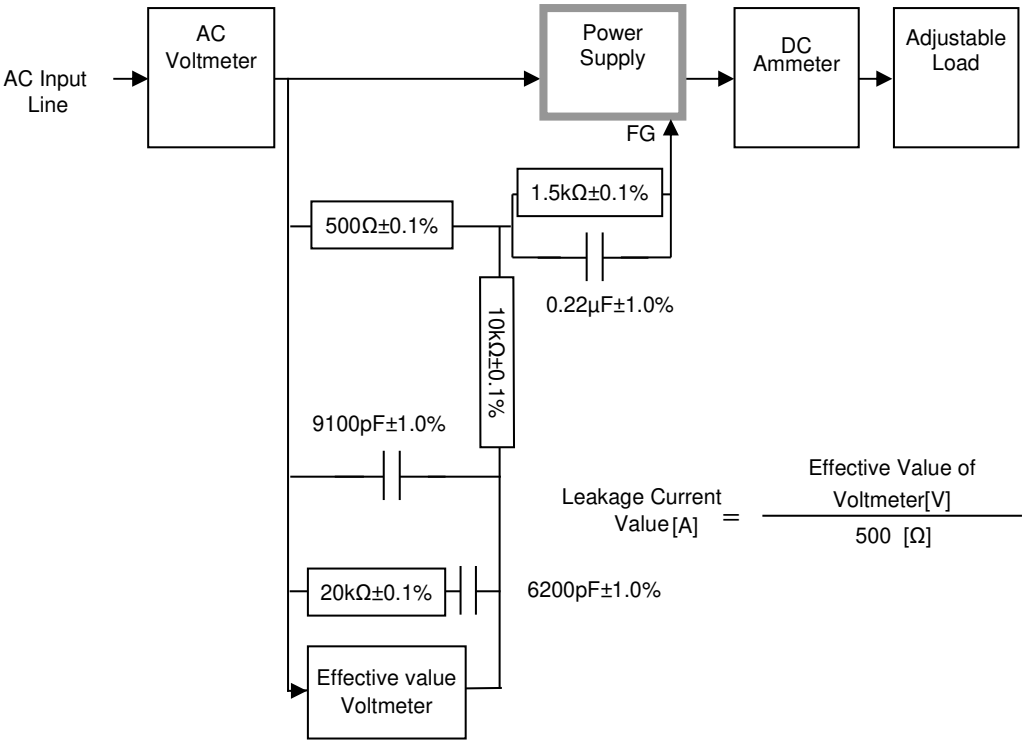

Figure C-3 (IEC62368-1 refer to IEC60990 Fig.5)